ep&t

Publications Mail Agreement No. 40065710

electronic products and technology - AUGUST 2016

ep&t
electronic products and technology

Volume 38 Number 5 August 2016

Stephen Law
Editor
416.510.5208
slaw@ept.ca

Sohail Kamal
West Coast Correspondent
sohail@nextgear.ca

Peter Loney
Publisher
416.510.5207
pdloney@ept.ca

Joanna Malivoire
Account Manager
Direct: 866.868.7089
jmalivoire@ept.ca

Tracy Lelyk
Art Director
Operations Coordinator
416.510.5120
tlelyk@ept.ca

Anita Madden
Circulation Manager
416.442.5600 ext 3596
amadden@annexnewcom.ca

Bona Lao
Subscription Inquiries
416.442.5600 ext 3552
blao@annexnewcom.ca

Tracey Hanson
Account Coordinator
416.510.6762
thanson@annexnewcom.ca

Tim Dimopoulos
Executive Publisher

EP&T (Electronic Products & Technology) is published nine times per year: Monthly in February, May, August, September, October, Bi-Monthly January/February, March/April, June/July, November/December by:

Annex Business Media
80 Valleybrook Drive, Toronto ON M3B 2S9
info@ept.ca Website: www.ept.ca
Tel: 416.442.5600 Fax: 416.510.5134

Sales: 416.510.5207 • Editorial 416.510.5208

ISSN 0708-4366 (Print) • ISSN 1923-3701 (Online)

Subscription Rates: Canada: $56.00 per year, US: $98.00 per year, International: USD$134.00 per year, Single copy: $15 (Canada); $20 (all others)
Editorial Purpose: Electronic Products & Technology provides timely, comprehensive coverage of the latest worldwide developments and trends in electronic products, equipment and systems, and interprets their significance to manufacturers and end-users in the Canadian marketplace.

Publications Mail Agreement No. 40065710
Canada Post: Return undeliverable Canadian addresses to:
EP&T Circulation Dept.,
80 Valleybrook Drive, Toronto, ON M3B 2S9,
Subscription Inquiries: 416.442.5600 x3548 • circulation@ept.ca
EP&T (Electronic Products & Technology) assumes no responsibility for the validity of claims in items reported.

Printed in Canada

We acknowledge the [financial] support of the Government of Canada.

Canada

SCAN HERE
for EP&T's Digital Edition

Automated vehicles – who is in the driver's seat?

Driverless vehicles, otherwise known as autonomous, automated or self-driving cars, are no longer science fiction. The technology is here, and several companies are already testing them on the roads.

A recent report released by Juniper Research listed the top five players that are most likely to bring self-driving cars to consumers. They are: Google, Volvo, Daimler, Tesla and Apple.

Most vehicles today are not fully autonomous. Many are considered 'partially' or 'highly' automated and still require some driver intervention. Predictions vary on when fully autonomous vehicles will be available for purchase.

Driverless technologies, however, continue to appear, in installments, in mass-produced cars. Some present-day models can automatically slide themselves into tight parking spaces. Some can maintain a safe following distance and stay in lane in steady traffic. Some can even apply the brakes when they sense a collision is imminent. It's easy to imagine how all these discrete systems can be combined, using sophisticated software, into a comprehensive auto-pilot.

Undeniably, there are a lot of things to figure out, such as government regulations, liability insurance rules and the development of infrastructure needed to support driverless vehicles, to name a few.

As a result, it could still be decades before cars come standard without a steering wheel or pedals.

One of the largest carmakers on the planet recently conducted a significant U-turn on its involvement with autonomous development. Toyota spends $10-billion a year on research, (more than any other except Volkswagen). That pays for improvements in everything from lithium batteries to seatbelt design, but such tweaks may not be enough anymore if Toyota is to remain the world's top seller of cars. As a result Toyota lags behind.

Pundits anticipate there to be plenty of bumpy roads ahead in the self-driving car movement, as the setback or wake-up call was served recently via a fatal crash in a Tesla vehicle.

No doubt, the development of autonomous vehicles now threatens to change the very essence of driving. It's possible that a generation from now everything from roadway design to driver certification will be radically reshaped by the ubiquity of semi or fully autonomous vehicles. Carmakers without the requisite technology will be as relevant as someone trying to determine the proper ISO film for their camera – instead of snapping a digital selfie.

Stephen Law, Editor
slaw@ept.ca
@EPTmagazine

NEWSWATCH

Aerospace mfg industry set to lift-off in Canada

Canada's aerospace manufacturing industry's order book is growing and production is set to increase starting in 2017, according to The Conference Board of Canada's latest outlook for the industry.

"Despite the current global economic slowdown, new orders of commercial aircraft continue to outpace shipments, resulting in a growing backlog," said Carlos Murillo, Economist, The Conference Board of Canada. "At current delivery rates, the global commercial aircraft backlog would take close to eight years to be cleared. This is good news for Canadian aerospace manufacturing companies, as Canadian firms continue to make inroads in this market segment and a large backlog supports future production.

"Furthermore, like other manufacturing industries, Canada's aerospace industry is also benefiting from the current exchange rate environment."

Aging aircraft fleets, rising fuel prices over the coming years, growing concerns about climate change, and increasing air travel are encouraging airlines to replace their less fuel-efficient aircraft. The Canadian industry's order book for commercial aircraft was recently buoyed by a string of new orders for Bombardier C Series from Air Canada, Air Baltic, and Delta Airlines. Bombardier now has a total of 325 firm orders from 15 customers across the globe for C Series Aircraft, which amounts to an estimated catalogue value of between US$20 billion and US$25 billion. In all, industry production is expected to fall by 0.8 per cent this year, before rebounding by 4 per cent in 2017.

One factor clouding the outlook for the industry is the private business jet market, which remains subdued due to weaker global economic prospects. Nevertheless, the long-term forecast points to a growing market. As such, the global business aircraft fleet is projected to grow to around 19,000 jets by 2020, compared with about 16,000 in 2015.

GM Canada to expand autonomous vehicle engineering, software development

General Motors has announced a major expansion of its engineering and software work in Canada with focus on supporting the development of innovative new automotive systems and technologies for the future.

GM will expand its Canadian engineering base to reach a total of approximately 1000 positions over the next few years. The new GM Canada work will be focused in the areas of autonomous vehicle software & controls development, active safety and vehicle dynamics technology, infotainment and connected vehicle technology, all important areas for the development of new connected, autonomous and shared vehicles and mobility systems.

This will bring the Oshawa Tech Centre beyond its maximum capacity and as a result, GM will also soon open a new Automotive Software Development Centre in Markham Ontario. Hiring for the new positions has commenced and more details will follow in the weeks ahead.

Additionally, GM will be investing $10 million in its Kapuskasing Cold Weather testing facility which is an important part of our engineering capability based in Canada where we conduct important testing for a wide range of new GM products and technologies.

Anechoic chamber enables acoustic test at Fanshawe College

Fanshawe College in London ON opened the doors to its brand new Canadian Centre for Product Validation (CCPV), representing a one-of a-kind facility in Canada (one of only three in the world). The expansive 25,000 square-foot, two-story centre houses ultramodern validation technologies for product prototyping and testing.

The CCPV opened its doors for business earlier this month and is fully operational, offering multimodal product testing to new and established companies of any size worldwide. Among those trappings is an Eckel Noise Control Technologies anechoic chamber that enables high quality noise performance testing.

"The Eckel chamber will also be used to develop new product-focused validation protocols and methodologies," says Dr. John Makaran, P.Eng., director of the CCPV. "We are hopeful that our activities will advance the manner in which products are evaluated, including the progress of noise performance testing."

"The CCPV represents the absolute cutting edge of product testing and validation. The fact that it chose one of our anechoic chambers to handle its noise performance testing is a huge honor. It signifies that our chambers offer the ultimate in custom-engineered acoustic testing and research structures," adds Eckel vice-president Jeff Morse.

The internal dimensions of the hemi-anechoic chamber are 30 ft. long by 25 ft. wide and 14 ft. high. The chamber has a 100 Hertz cutoff, and the maximum background noise level within the chamber is 14-20dB. It has been qualified to ISO 3744 using broad band noise and ISO 3745 using broad band noise and pure tones.

CPEIA, IEEE forge strategic partnership

The Canadian Printable Electronics Industry Association (CPEIA) and the Institute of Electrical and Electronics Engineers, Incorporated (IEEE), have entered into a strategic partnership with the signing of a Memorandum of Understanding between the CPEIA and the IEEE Ottawa Section, to introduce printable and flexible electronics (PE) to IEEE members as a toolset for developing new products and applications and enhancing existing ones.

This MOU will open opportunities for the printable electronics industry to use IEEE's strong technical research, industry and standards development base for developing solutions. The volunteer IEEE membership will have an opportunity to apply their knowledge, skill and career paths. These solutions will also create opportunities for applying printable electronics to development and humanitarian initiatives through IEEE.

"PE offers engineers, researchers and other technology developers a whole new set of building blocks for applications in automotive, aerospace, defence, mobile communications, consumer electronics, health, intelligent buildings and connected homes," says Peter Kallai, president and CEO of the CPEIA. "With its extensive global network, IEEE is a fantastic partner to help us reach a broader audience of innovators and build a stronger PE sector in Canada. IEEE members are the inventors who advance science and technology in their everyday research and development work; they are also the engineers who make everyday decisions about what technologies to use or include in a host of technology products. We are proud to partner with the IEEE – this is a major milestone for the CPEIA."

"There is a natural fit between the IEEE and the CPEIA," says Janet Davis, chair of the IEEE Ottawa Section. "Our members can take advantage of PE technologies to add intelligence to everyday objects at a fraction of the cost of conventional technologies, and develop this industry right here in Canada. We welcome the opportunity to work together with the CPEIA to advance PE technologies."

BC College grad wins national electronics contest

Zach Andrews is adding another medal to a growing collection of accolades after returning from the Skills Canada Competition in Moncton, N.B., with a gold medal in electronics.

The 31-year-old qualified for the Canada-wide competition after winning gold for B.C. in April at the provincial challenge in Abbotsford. He was joined by fellow Okanagan College student Aaron Schmidt, who also earned gold at the provincial competition and finished second in the country in automotive service.

Andrews drew on his experience from Skills BC at the national competition but was slightly less confident about the outcome.

"The national competition was much longer and covered all aspects of the technical skills we learn in the program ó and if you ask anyone who has taken electronic engineering, it is not an easy program. I was shocked at how I was able to draw on concepts and techniques I had learned in first year. It was incredible, everything from circuit theory and design and fabrication to soldering and programming microcontrollers. I think I was the only person to complete the soldering task and have the circuit fully functional."

Electro Sonic grows its line card

Leading global distributor of electromechanical, interconnect and passive components Electro Sonic Group Inc., Markham ON, has added two new principals to its linecard, including Teledyne LeCroy, manufacturer of oscilloscopes, protocol analyzers and other test equipment.

"Teledyne LeCroy is a leader in the field of test & measurement and we will offer our customers first class products to measure, analyze, and verify electronic devices of all types," says Niall Flanagan, national sales manager of Electro Sonic.

Electro Sonic has also added CTS Corp., a designer and manufacturer of sensors, actuators and electronic components for OEMs in the aerospace, communications and defense sectors. Established in 1896, CTS has enjoyed 120 years of innovation. As technology has continued to move forward, the company has been right alongside, engineering intelligent ways to meet ever changing needs.

"Playing smart is part of CTS' DNA, helping us to sell ground-breaking technological and material advances into practical solutions," Flanagan says. "CTS' business touches everything from vehicles to laptops, base stations to satellites, defense systems to medical devices, making CTS an excellent fit to our line card."

Electro Sonic also reached a distribution partnership with Anderson Power Products (APP), a leader in developing high quality, low cost, power interconnect solutions. APP is often found in high power and/or high voltage applications.

"Anderson Power connectors are high quality, reliable, and fit in many of the markets our customers are in today. As a true interconnect and electromechanical distributor, we are thrilled to distribute Anderson Power Products to our industrial, electric vehicle, and telecom customers," Flanagan adds.

Lazaridis' Master's in Tech program delivers world-class management education

The Lazaridis Executive Master's in Technology Management (Lazaridis EMTM) within the Lazaridis School of Business and Economics is now accepting applicants for September 2016.

The Lazaridis EMTM provides world-class management education for up-and-coming leaders in the technology industry as part of the mandate of the recently created Lazaridis Institute for the Management of Technology Enterprises.

"Many senior-level technology managers have moved into leadership positions without all of the requisite knowledge to strategically manage their organization's growth," said Michel Kelly, dean of the Lazaridis School of Business and Economics. "The Lazaridis EMTM will enable them to contribute at the highest level to their current executive team, as well as advance to the C-suite themselves."

Graduates of the program receive a Master of Science (MSc) in Management degree. The Lazaridis EMTM has the depth of a research-based MSc but is tailored for professionals with years of industry experience. It provides practical and relevant knowledge for managers in a technology-driven economy.

Reliable Detection For Your Application

Altech Corp. | BANNER | BEI SENSORS | CARLO GAVAZZI | CHERRY

cynergy3 components | Dwyer | FLOWLINE | Gems Sensors & Controls | Honeywell

HSI SENSING | IDEC | KAVLICO | OMRON AUTOMATION & SAFETY | STI | Panasonic

PEPPERL+FUCHS | red lion | TURCK | WIKA

You can't afford not to know. See it all at **thinkallied.com/sensors**

thinkallied.com

ALLIED ELECTRONICS®

1.800.433.5700

http://ept.hotims.com/61399-3

Ronin8 Technologies' green solution garners accolades

Wins BCTIA's Most Promising Pre-Commercial Technology Impact Award

By Sohail Kamal, West Coast Correspondent

The entrepreneurs behind Ronin8 recognized a problem: We love our phones and electronics and we are consuming them at an ever increasing rate. Smaller, faster and more powerful are the lures that put new gadgets into our pockets leaving behind a trail of electronic waste, much of which is recycled using toxic processes.

So Ronin8 developed an environmentally friendly method of extracting, for instance, the high value gold, silver, copper and platinum in our e-waste. Truly remarkable work, it's perhaps no wonder they won one of the BCTIA's 2016 Technology Impact Awards. I recently had the opportunity to speak with Ronin8's CEO, Peter Holgate, about the company's aim to redefine sustainability by creating a true closed-loop economy in which every type of material is reused.

Q: Great to see a West Coast company develop new green services — what was the impetus for the start-up of Ronin8 Technologies?

"We were determined to be consequential in eliminating a multigenerational debt. Electronic waste is the fastest growing waste stream in the world. We are literally handing our children and grandchildren a monumental problem," explained Holgate. The volume of electronic waste generated worldwide is expected to climb to 65 million tons according to a study conducted by a partnership of United Nations organizations, industry, governments and scientists. "Globally the preferred treatment still consists of incineration in smelters. Using 200-year-old technology that itself produces toxic airborne emissions like dioxins and furans compounds this multi-generational debt."

Q: Is Ronin8 changing the way we look at electronic waste, and why should it matter to OEM's?

"The environmental and human cost of mining minerals is unacceptable. Continually producing virgin polymers, virgin fiberglass and virgin ceramics is a strategic dead end [for OEMs]. By deploying Ronin8's engineered process, including our sonic generation technology, we can start treating all these materials as sustainable," says Holgate. Ronin8's five year goal is to partner with an OEM who has the strategic vision to be a leader in sustainability. "A large OEM who already manages the collection of electronic waste would be an ideal partner," states Holgate.

The work of recycling e-waste in an environmentally sustainable fashion can then be outsourced to Ronin8. Ronin8's process means that their output minerals are conflict free. This is of tremendous value to brands as they can report on the amount of greenhouse gases, water and other valuable resources directly saved by avoiding traditionally mined materials.

Declaring that "leaving a better world for future generations" as one of their guiding principles, their work can and hopefully will dramatically decrease the amount of released toxic chemicals and the amount of raw materials we need to mine to produce our favourite electronics. Holgate explained that 20% of all the gold mined every year goes into electronics. 1/3 of all silver that is mined annually goes into electronics. To be meaningful, their challenge will be capacity. 2.5 billion mobile devices were sold last year, and in order to serve the big brands and keep up with the global growth in electronics, they will need to work quickly.

Q: What does winning the BCTIA award mean for Ronin8?

"We are thrilled at the recognition and third party validation of our efforts. Of course it also means we have a greater responsibility to live up to the expectations of the award," says Holgate. They applied for one of the BCTIA's hypergrowth programs, and from there, they were nominated as a finalist for the award. "I had no expectations to win, but ... having been awarded the most promising pre-commercial technology has had a great impact [on our team and our stakeholders]."

To learn more about Ronin8, go to **www.ronin8.com**, and to learn about all of the recent winners of the 2016 BCTIA Impact awards, go to **www.bctia.org**

products on review

Stainless steel wireway system protects cables in corrosive environments

1487SS modular pull-through wireway system consists of three cross-section sizes: 4 x 4, 6 x 6 and 8 x 8 inches, all with a smooth brushed stainless steel finish. Components are available in standard 12, 24, 36, 48, 60 and 120 inch straight lengths with an extensive range of fittings that enable required configurations to be constructed from standard elements. System sections are formed from 14 gauge 304 stainless steel and are fitted with 10 gauge flanges at each end. The top of each straight section consists of a hinged cover, secured with easy to operate screw clamps to give access to the cables. System provides rapid installation, is sealed to NEMA Type 4X and IEC60529 IP66, and is constructed with stainless steel components allowing for effective use in wet, corrosive environments both indoors and outdoors. It is designed to enclose and protect electrical or network wiring from dirt, dust, oil and water.

HAMMOND MANUFACTURING

http://ept.hotims.com/61399-28

Speed control units deliver adjustable ac fan control

Field adjustable OA11/22 dual channel phase control fan control product allows the user to control fan speed for single or multiple fan assemblies. Designed for use with any ac fan or fan tray, units provide precise airflow control. The 120/220Vac speed control unit efficiently allows an application engineer to specify and control fan noise, speed and air delivery precisely according to specific application requirements.

ORION FANS

http://ept.hotims.com/61399-29

MicroTCA chassis platform upgraded to PCIe Gen 3

PXS0108 MicroTCA chassis platform is upgraded to PCIe Gen 3, providing 6 Advanced Mezzanine Card (AMC) slots and 1 MicroTCA Carrier Hub (MCH) slot. Various power options are available, including a dual redundant configuration. Product has an active backplane that alleviates the need for expensive Power Modules (PMs). The backplane provides a power manager for each slot that controls and limits the management and payload power to the maximum allowed. PCIe Gen 3 brings the backplane speed to 8 GB/s in single x8 or dual x4 options.

PIXUS TECHNOLOGIES

http://ept.hotims.com/61399-30

Ultra-wide input voltage dc-dc converter delivers next gen PV power

PV15/PV40-29Bxx series 15W and 40W power supply modules, suitable for utility-scale PV systems, provide 200-1500Vdc input voltage, high isolation voltage of 4000Vac and can significantly be used at high altitudes up to 5000m. Input voltage from 1000Vdc to 1500Vdc allows longer strings used in the PV system. Products are designed with input under-voltage protection which can protect system stability from frequent restart.

MORNSUN

http://ept.hotims.com/61399-31

NEMA socket series comes with options

Complete series of NEMA 5-15, 5-20, 6-15 and 6-20 snap-in and screw-mount sockets are available with options that include QD and solder tabs with or without wire binding screws. Model 6-15 and 6-20 sockets completes firm's nine series product line that includes both snap-in and screw-mount sockets with four different configurations available for each one. NEMA 5-15 socket is the only snap-in socket that has two different size face plates. The small face plate (8821 series) is 26.9 x 32mm in size and the large one (8822 series) is 37.27 x 31.99mm. The rest of the snap-in sockets utilize the large face plate size.

INTERPOWER

http://ept.hotims.com/61399-32

Aqueous batch cleaner includes water treatment

Austin American Technology Aqua-ROSE batch cleaner delivers integrated cleanliness test and water treatment in one unit. Product provides stainless steel cabinet and cleaning chamber along with process viewing window with internal lighting. Product provides 50% smaller footprint, while batch Pass/Fail limits are reported in ugNaCleq/cm2. Easy to use unit is password protected and provides color touch screen controls.

AIRTRON CANADA

http://ept.hotims.com/61399-33

Power SMD resistor protected by molded case

SANNOHM STR35 power SMD resistor 35 watt (at 25°C) in a TO-263 style power package has a molded case for protection and is electrically isolated from the attached metal tab. With an operating voltage of 500V max and a dielectric strength of 2000Vac, device is available in resistances from 0R50ohm through 100K ohms, in tolerances of 0.5% thru 10% and TCR ratings of 50ppm thru 300ppm depending on resistance value.

SP INTERNATIONAL

http://ept.hotims.com/61399-34

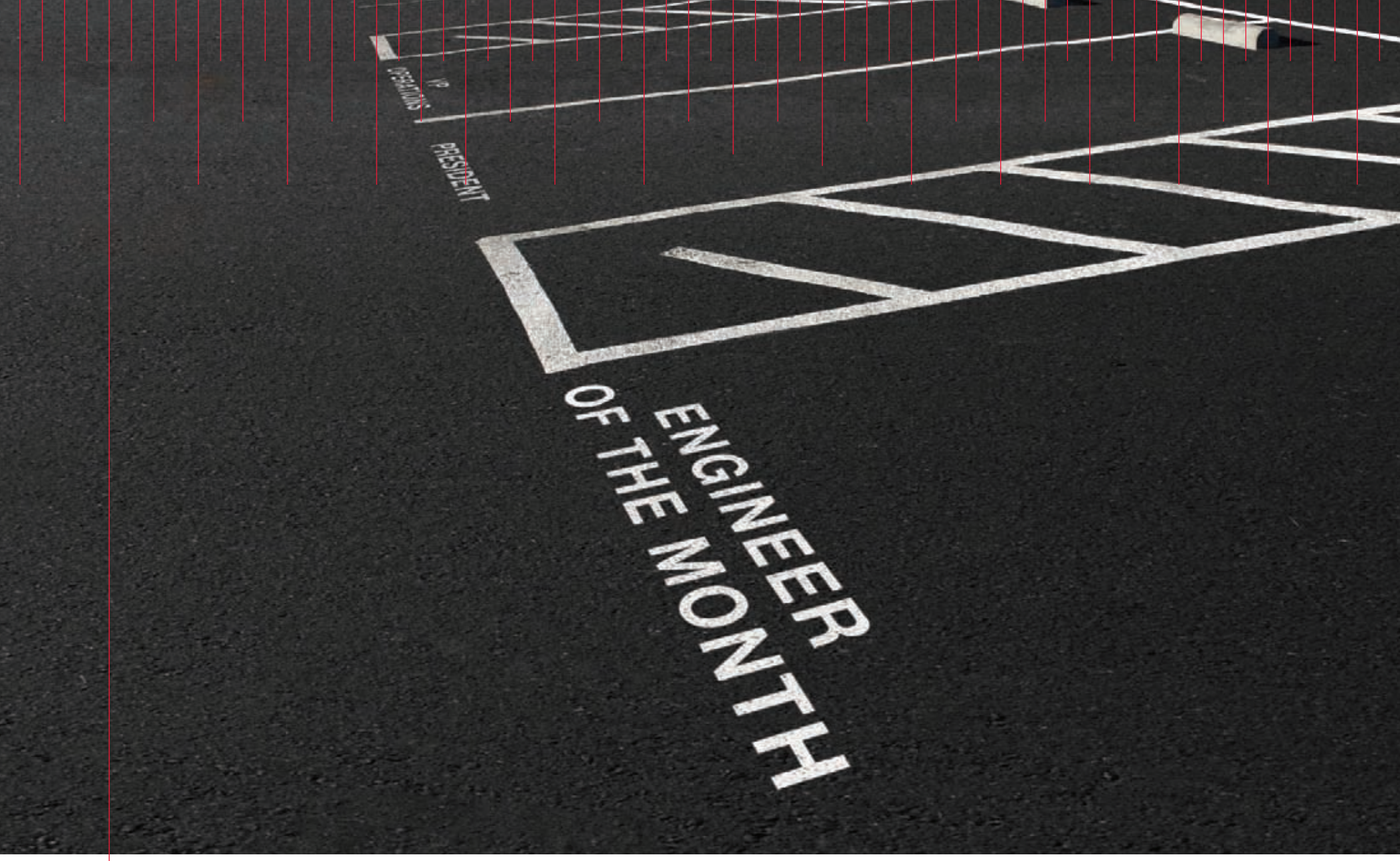

Become your company's most valuable player.

Elevate your status with Keysight's InfiniiVision oscilloscopes.

Get your projects on the fast track with features such as zone triggering, built-in analysis software and super-fast waveform update rates. Plus Keysight has a team of experts ready and available to help you overcome any test and measurement obstacles. You already have the talent, and with Keysight you have the tools you need to become your company's MVP.




Keysight InfiniiVision oscilloscopes	2000 X-Series	3000T X-Series	4000 X-Series	6000 X-Series
Bandwidth	70 MHz–200 MHz	100 MHz–1 GHz	200 MHz–1.5 GHz	1 GHz–6 GHz
Instrument integration	Arbitrary waveform generator, digital voltmeter, protocol analyzer, FFT, counter, MSO			

Ready to achieve MVP status? Go to the Scopes Learning Center:
www.keysight.com/find/ScopeMVP

USA: 800 829 4444 CAN: 877 894 4414

KEYSIGHT TECHNOLOGIES

Unlocking Measurement Insights

http://ept.hotims.com/61399-4

Agilent's Electronic Measurement Group is now **Keysight Technologies.**

Power Management

Dalhousie U's researcher recognized among Canada's top innovators

By The faculty of science, Dalhousie University, Halifax NS

Dalhousie University's very own battery researcher Jeff Dahn was one of six recipients of the brand new Governor General's Innovation Awards (GGIA) handed out earlier this spring.

The GGIA honours Canadian innovation across all sectors while aiming to inspire a culture of entrepreneurial innovation. The awards are given to individuals, teams or organizations whose innovations are exceptional, transformative and impactful.

"I feel very fortunate to have fantastic students, post-docs and staff working with me to drive our innovations forward. Having our work recognized with a Governor General's Innovation Award is an absolute pleasure," says Dr. Dahn, Canada Research Chair in Battery and Fuel Cell Materials and professor in Dalhousie's Department of Physics and Atmospheric Science and Department of Chemistry.

Electrical energy storage advancements are critical for harvesting the true potential of renewable energy sources. Dr. Dahn's international reputation for advancing battery technology in support of better energy storage has been recognized for decades. His trailblazing research team has helped increase the amount of energy Lithium-ion (Li-ion) batteries can store, developed ways to test and increase their lifespan, and helped reduce their cost.

"We are really excited to see many of our advanced methods for improving Li-ion batteries being adopted worldwide," says Dr. Dahn. "One of our current goals is to double the lifetime of Li-ion batteries without sacrificing energy or power. This will help enable wider adoption of electric energy storage and electric vehicles."

As one of Canada's top innovators, Dr. Dahn is committed to inspiring the next generation of energy storage scientists. His research team currently includes undergraduates, graduate students, post-doctoral fellows, research assistants and technicians who've published, discovered and developed their own spin-off companies under Dr. Dahn's guidance and supervision.

Novonix was established to develop battery testing systems specifically catered to precision measurements of coulombic efficiency. The firm provides cell testing services on its in-house high precision chargers allowing customers to access to state of the art equipment

Jeff Dahn, pictured in one of his labs at Dalhousie University. (Photo: Nick Pearce)

Novonix provides expertise in materials and cell testing

One of those specialized start-up firm's spun out of Dr. Dahn's lab includes Novonix Battery Testing Services Inc., Dartmouth NS. The company provides expertise in materials and cell testing, with strong focus on the use of high precision coulometry for lifetime evaluation of lithium-ion cells. Novonix has spent the last year developing industry leading high precision chargers able to measure the coulombic efficiency of cells to less than 20ppm noise (typically < 10ppm) and to better than 50ppm accuracy. Novonix provides cell testing services on its in-house high precision chargers, sales of high precision charger systems along with materials testing services.

"Dr. Dahn's passion for a sustainable energy future has driven him to become a world leader in electrical energy storage," says Martha Crago, vice-president, research at Dalhousie University. "His commitment to collaborate across academia, government and industry has led to the advanced Li-ion battery technology used in electric vehicles, grid energy storage and power tools."

Many of Dr. Dahn's studies over the last 20 years have been conducted as a Natural Sciences and Engineering Research Council of Canada (NSERC) Industrial Research Chair in Materials for Advanced Batteries with 3M Canada. This year, that research contract will come to an end and Dr. Dahn will begin a five-year research partnership with Tesla Motors.

War of the currents and its implication on modern data centres

Steve Jobs and Bill Gates - two of the most well-known figures in modern technology and also, one of the industry's most infamous rivalries. "The only problem with Microsoft is they just have no taste," Jobs famously stated in 1996.

Despite the snide remarks and occasional lawsuits, both Jobs and Gates realized there was room on the IT market for both companies to coexist. The same however, cannot be said for George Westinghouse and Thomas Edison. Arguably two of the brightest minds in science, the pair engaged in a decade-long vendetta over alternating (ac) and direct (dc) electrical currents.

More than a century later, ***Darren Halford, sales manager of industrial automation supplier EU Automation***, discusses the war of the currents and its implication on modern data centres.

DC power making a comeback

Fuelled by the fear of losing his fortune, in the late 1880s Edison began a propaganda campaign to convince the public that ac power was deadly – despite dc power being equally dangerous. In spite of brutal demonstrations, ac came out on top. Now, over a century later, dc power is finally beginning to make a comeback, but this time, on its own merits.

Any device that uses transistors relies on the direct flow of electricity that dc power provides. Accounting for up to 20% of the world's total power consumption, consumer devices such as PCs, smart phones and televisions rely on dc direct current. To some extent, our growing taste for consumer technology is responsible for the steep growth of dc.

DC power not limited to user level

However, the growing popularity of dc power is not limited to user level. With high voltage transmission lines, dc power provides more efficient and lower construction costs than its ac alternative. Currently, ac is the standard for transmitting electricity around the grid and to many industrial devices, like electrical motors. However, as industry struggles to increase efficiency, while maintaining or improving availability, dc power is now seen as an opportunity to save energy.

By distributing dc power to dc devices, rather than converting it to ac along the way, companies can avoid substantial energy losses.

Another driver for dc power is the growing number of data centres around the world. Currently consuming 1.3 per cent of electricity globally, data centres are growing in size and capacity. Data centre managers are currently converting the incoming ac power from the grid by using large centralized converters to distribute dc power across their facilities. However, by replacing ac-dc converters with more efficient, centralized inverters, energy consumption can be reduced by up to 15 per cent.

The benefits of dc power for the data centre are clear. Financially, dc power applications are cheaper to install, operate and maintain than ac alternatives. What's more, there is no need to adapt capacity to account for phase balancing or harmonics, as they are not a factor with dc power. As data centres enter a new stage of maturity, where reliability and delivering a higher capacity is vital, dc power seems to be the obvious solution to lower costs and reduce power consumption.

DC uprising will take shape soon

However, not all experts are convinced the dc uprising will truly take shape anytime soon. In developed countries, where the ac power grid has already been well established for over a century, the logistical problems of changing large parts of the existing grid from ac to dc could make the changeover tricky.

While there may not be a global transformation of the power system to dc on the cards anytime soon, there is no denying that for many modern organizations, direct current is a fundamental part of the IT infrastructure: with critical loads consuming dc power and back-up sources generating it.

Ultimately, the delivery of dc power from the grid may not be as unlikely as skeptics believe. For developing economies, that are building completely new power infrastructures, the potential benefits of implementing dc power grids are certainly appealing. But for now, the war of the currents continues to rage on.

For more information on industrial automation parts from EU Automation, go to http://ept.hotims.com/61399-35

Medical, ITE power supplies are 94% efficient

CUS200M series of medically and ITE certified power supplies provide efficiency levels of up to 94%, internal heating is reduced allowing electrolytic capacitor life to be extended. Product can deliver 200W convection cooled and up to 250W with 1.5m/s airflow and is packaged in the industry 3" x 5" standard footprint. Operating from a universal input of 85-265Vac, products come with nominal outputs of 12, 18, 24 and 48Vdc, which can be adjusted via a potentiometer. All models can deliver full power with ambient temperatures of -20 to +50C and 50% power at +70C.

TDK-LAMBDA

http://ept.hotims.com/61399-36

Switching regulator dc-dc converter meets wide output power range

K78-1000R3 Series 1A non-isolated switching regulator dc-dc converter meets a wide output power range requirement for many applications. Delivering high efficiency up to 96%, device provides no-load input current as low as 0.1mA. Device operates with a wide input voltage range of 6 to 36V and delivers precise output voltages. With standby input current as low as 0.1mA, low ripple & noise and short-circuit protection, devices are suitable for various applications. In addition to the encapsulated package, an open-frame version is also available.

MORNSUN

http://ept.hotims.com/61399-37

newswatch

New battery technologies causing problems

By Neil Oliver, technical marketing manager, Accutronics

The battery sector has evolved substantially in recent years. An increased demand for portable power supplies, driven by the momentum at which Industry 4.0 is being implemented, has led to a renewed interest in battery technologies. From edible to foldable and air-powered to urine-powered, there is a multitude of new battery chemistries being researched, some of which sound as though they are verging on science fiction.

The humble battery is one of the unsung heroes of electronics. While it is capable of powering both commercial and critical devices, it is often overlooked and undervalued during the product design stages, often leading to a wide range of performance problems later in the product lifecycle.

> Although OEMs will want to commercialise these new technologies quickly, as with all discoveries, each exciting chemistry raises a series of questions concerning their safety, reliability and long-term effectiveness.

In that respect, it is a positive sign that newly emerging battery technologies are gaining so much traction. The renewed interest in this staple of modern devices may lead to more original equipment manufacturers (OEMs) considering power supplies earlier in the initial product design stages, ultimately allowing battery manufacturers to deliver more effective solutions.

Although OEMs will want to commercialise these new technologies quickly, as with all discoveries, each exciting chemistry raises a series of questions concerning their safety, reliability and long-term effectiveness.

For example, arguably the most popular new battery technology is that of lithium-air batteries. Theoretically boasting lightweight properties and an energy density up to five times higher than that of lithium-ion, these 'breathing batteries' have been the subject of debate since the 1970s. They are only now being properly researched in light of material developments and a greater push for renewable energy sources.

Yet the fundamental problem is stability. Lithium-air batteries are hindered by their own chemistry and components, with the reactivity of lithium itself making it challenging to find an electrolyte that it will not negatively react with. Likewise, peroxide formed during discharge regularly reacts with carbon cathodes to pose problems for recharging the battery. A one-charge lithium-air battery is neither cost-effective nor practical and certainly doesn't meet the renewable demand it is designed for.

This question of stability is one that also surrounds magnesium, sodium-ion and many other proposed batteries. In order to achieve long-term operation safely, each cell must be chemically stable and there must be no fears of cathodic reaction or aqueous electrolytes evaporating. Until long-term tests can assuage these concerns, these technologies will remain more fantasy than reality.

Of course, these technologies won't be in the market anytime soon. They must still undergo rigorous testing to resolve these problems, ensure they are fit for purpose and finalise what, if any, advantages they offer over lithium-ion batteries. Continued industrial and academic research will inevitably lead to a heightened interest from buyers looking to specify alternative sources of power for their portable devices.

For all the excitement surrounding these new chemistries, it is important to remember that lithium-ion batteries themselves are also still evolving. Modern technologies mean that battery manufacturers such as Accutronics are able to work with OEMs to tailor batteries to their specific requirements, making sure that the battery design and specifications are available for the life of the product.

Lithium-ion batteries now provide more than just a high energy density and reliable discharge profiles. They also offer features such as and even in-built software that helps to prevent battery counterfeiting. These technologies may not appear as immediately interesting as using sand as a battery's anode material, but they are realistic and have proven reliable.

Miniature 2W dc-dc converter has medical safety standard

MTC2 series of 2 Watt single output, regulated and isolated dc-dc converters are available with either 12 or 24Vdc 2:1 input voltage range and output voltages of 3.3, 5, or 12Vdc, the surface mount MTC2 has a 3kVac input to output isolation. Measuring 14.99 x 14.22 x 11.23mm, units comply with both the UL/EN 60950 reinforced insulation safety standard for use in commercial equipment and the ANSI/AAMI ES60601-1 medical safety specification with 2 x MOOP (Means of Operator Protection). Output is regulated to ±0.5% of the nominal output voltage and an output voltage trim function permits adjustment of the output by ±10% to suit the needs of special applications.

MURATA POWER SOLUTIONS

http://ept.hotims.com/61399-38

Switch-mode power supply protects power, control circuits

SMP single and three-phase switch-mode power supplies provide a single source for 24Vdc control system that includes: power circuit protection (4230-T) and control circuit protection (ESX10, ESX10-T, ESS30& ESS31-T). The DIN Rail mountable units are available in 5A, 10A, 20A and 40A current ratings and 24Vdc operating voltage. This corresponds to the power classes 120W, 240W, 480W and 960W. Devices have an efficiency factor of up to 93%, are designed for a maximum ambient temperature of 70C.

E-T-A CIRCUIT BREAKERS

http://ept.hotims.com/61399-39

Power supply delivers 90% efficiency in 5x5" package

Uber Power model PM3622OB power supply provides 10kW, 200Vdc output air-cooled isolated front end in the standard 3U (5x5-inch) package. Unit provides >90% efficiency for output voltage 200V at nominal line and full load. Product is available in both 240Vac 3P and 480Vac 3P with 0.95 power factor. Unit comes in a 5x5x17.5-inch package yielding a power density of 22.85 watts/in3. Standard features include current, voltage and over temperature protection, as well as voltage and current programmability, current sharing, output isolation FETs, ac fail and dc fail as well as custom options.

PIONEER MAGNETICS

http://ept.hotims.com/61399-40

2500W dc-dc converter drives low voltage equipment

HVT-2K5-1300/24-4U5, heavy-duty, high input voltage, industrial quality dc-dc converter drives low voltage equipment. Unit converts direct current in a 1000Vdc to 1500Vdc range to 24Vdc at 100A. The output can be customized for other voltages including 48Vdc and 110Vdc. Input to output safety isolation is 5000Vdc and input to chassis isolation is 3450Vdc. Conversion efficiency is typically 85% at 1300Vdc nominal input, at full load. Device is built with rugged internal modules connected parallel via internal redundancy diodes.

ABSOPULSE

http://ept.hotims.com/61399-41

Fanless power supply delivers 600W with natural cooling

CoolX600 Series convection-cooled modular power supply platform delivers 600W output without fan assisted cooling from a compact 8.5 x 4.5 x 1U package. Product delivers best in class efficiency and reliability in addition to a comprehensive feature set and specifications available. Device comes with a five year warranty and provides natural convection cooling, with no fan/airflow required resulting in higher system reliability. Device provides higher input surge protection of 4KV Line to PE for operation in harsh environments, reverse energy protection without the use of external blocking diodes as well as safety certified operation at altitudes of up to 5000m.

EXCELSYS TECHNOLOGIES

http://ept.hotims.com/61399-42

1000W ac-dc baseplate cooled power modules boost efficiencies

PFE1000FA series of ac-dc power modules achieve up to a 4% efficiency improvement (up to 90%). Product series utilizes a single device containing power factor correction, regulation and input-output isolation. Modules operate from a universal input of 85-265Vac and are available with nominal outputs of 12, 28 and 48Vdc and can be adjusted +/-20% via a trim-pin. Modules can deliver full power with an operating baseplate temperature range of -40 to +100°C (+85°C for the 28V and 48V models below 170Vac). An isolated module good signal, remote on/off, 12V standby output, over voltage, over current and over temperature protection is included on all models.

TDK-LAMBDA AMERICAS

http://ept.hotims.com/61399-43

Low profile dc-dc converters boosts power density in IoT

ENA100 series (100W) and ENA200 (200W) low profile dc-dc converters are packaged in a plastic enclosure, which is IP21 and the boards are conformal coated to withstand high humidity, complying with the challenging environments found in the automotive industry and on-board IoT. Product's power stage uses specific components selected for robustness and high-reliability data and operated within a safe-band area. Product series comes with galvanic isolation of 500Vdc and built-in protections and filtering, making products ready to use without additional components.

POWERBOX

http://ept.hotims.com/61399-44

newswatch

Murata Power Solutions expands footprint in Canada

In a bold move, Murata Power Solutions Inc. has doubled its footprint on Canadian soil, expanding its engineering team and production capabilities to better serve its expanding and diverse customer base. The Mansfield MA-based manufacturer of dc-dc converters, ac-dc power supplies marked the grand opening of its office expansion in Markham ON, with a special event recently.

Murata Power Solutions president and CEO Stephen Pimpis (3rd from right) leads the ribbon cutting ceremony at the firm's expanded Markham ON facility.

Attended by customers, suppliers, city officials, plus sales representatives and executives from head office Murata Power Solutions unveiled its 35,000-square-foot design centre, which employs 56 people, mostly in an engineering capacity, says president and CEO Stephen Pimpis.

"We have managed to rapidly expand our customer base, as well as add more tier one customers through the expansion of this facility," says Pimpis. "This has driven our need to grow our engineering teams and product development areas. We are on a very good growth trajectory."

Murata Power Solutions is a subsidiary of Murata Manufacturing Corp., a global company with approximately $10-billion yearly revenue and over 50,000 employees worldwide. The firm designs and manufactures a broad offering of standard products and market leading custom solutions, focusing primarily on the computing, communications, industrial and medical markets.

The Markham facility will also assume some of Murata's corporate functions, including a quality engineering component to operations. "This is intended to speed our response time to the customer," Pimpis says. The firm will continue adding to its engineering team in Markham over the course of the next few years, says Pimpis, noting that these roles are quite diverse - representing a vast array of job roles including printed circuit board layout, documentation control, design engineers and qualification engineers. As the firm brings in more custom and industry standard designs, the Markham facility will continue to add test and validation equipment further enhancing its product development capabilities.

"More space provides us the opportunity to set up more work benches and lab benches," Pimpis says. "As we get more and more of these type of designs and they progress further along in the development process, we will need to also add ovens and environmental chambers to burn-in and test over different temperature ranges."

Pimpis says the design team has found success in pursuing applications that are driven by smartphones, tablets, wireless type data, which is spurring growth within the data centre market, which relates to networking, security, storage and power shelves for server racks.

"For a lot of our customers – the main focus is the data centre, networking datacom driven," Pimpis says. "The growth of IoT (Internet of Things) drives the need for more networking, security, storage – all of that stuff that resides in a data centre or somewhere else."

As a rule, data centres are constantly seeking ways to reduce electricity consumption as one of its primary costs – thus power density and efficiency are key concerns. Murata Power Solutions is focused on the customers' demands for efficiency - with power supply efficiency rates almost consistently around 96% now, according to Pimpis.

"Customers want us to continually push more power out of a smaller box. Improving efficiency is the value we provide to our customer. Our focus is to be a leader in efficiency and power density, to be a green power supply vendor," he concludes.

Tadiran Batteries enlists help from Acadia Lithium

Tadiran Batteries, a leading manufacturer of lithium batteries, has officially enlisted the support of Acadia Lithium Inc., Baie D'Urfe QC, to provide support in promoting and designing its products into OEM designs across Canada.

Serving as an applications specialist, Acadia Lithium will work in concert with local manufacturers' representatives and distribution sales, says Michael Labossiere, application specialist with Acadia Lithium.

"Acadia Lithium is strictly an applications only company, we do not buy or resell any product," Labossiere says. "Our sole purpose is to promote and design–in the complete Tadiran product line working on a direct basis with the local rep's or through distribution."


ENGINEERS START HERE
Access 500,000 in-stock electronics products, custom services, tools and expertise—all in one place. Plus, count on customer service that goes above & beyond to deliver your needs. Complete engineering solutions start at Newark element14.
1 800 463 9275 | newark.ca
Newark
element14
http://ept.hotims.com/61399-8

Understanding power supply measurement throughout the design process

By Varun Merchant, mainstream technical marketing manager, Tektronix Inc.

The pressure on designers to create efficient, inexpensive, sleeker and smaller power supply designs is more intense than ever before. Power supplies are the lifeline behind all electronics and electronic devices. However, higher efficiencies, higher power densities, time to market, standards requirements and cost reductions are impacting designs and designers alike. That's a lot to think about. But take a breather and follow along in this article as we outline the power supply design process and run through the test requirements at each step along the way.

Component manufactures usually provide designers with detailed datasheets, containing the necessary operating characteristics for a good power supply design. In many cases, component selection could be made on datasheet parameters alone. Unfortunately, increasingly rigid requirements on new designs occasionally require the designer to characterize components beyond the standard datasheet parameters.

When working with critical power components such as MOSFETs, IGBTs and diodes, select an optimized key parameter. The optimized key parameter could be an on-state, off-state or an AC characteristic. Next, test your components across all temperature ranges—well beyond the ideal conditions stated in the data sheet. Finally, test the passive and active components for real world conditions.

Power supplies are lifeline

The next stage in the design cycle is prototyping. Be aware that prototypes are prone to failure. Numerous things can go wrong with board routing, solder joints, component placement and hidden parasitics, so proceed with caution. Before powering on, always use a digital multimeter to check for shorts across all the input and output stages. Once that is completed, isolate the low-voltage analog and digital circuit into as many sub-circuits as possible and power up the prototype board one sub-circuit at a time.

Now you can isolate the on-board power supply and test the output with and without a load. After that is complete, check if the output voltage and ripple are what you expected. Lastly, use a precision dc power supply to power on individual low-voltage sub circuits. Don't just rely on the on-board power supply. If the on-board power supply has multiple outputs, we suggest using a dc power source with multiple isolated channels such the one shown in Figure 1.

Figure 1: For testing an on-board power supply with multiple outputs, you'll need a dc power supply with multiple isolated channels.

For an on-the-spot reality check, use a dc power supply that shows both the programmed settings and the actual measured outputs simultaneously which will allow you to quickly determine if the dc stages are drawing too much current.

High-voltage ac circuit power-on

Now that all of your low-voltage dc circuits are checked out, it's time to power-on the high-voltage circuits. This is the stage where your prototype will see high voltage for the very first time. It's always a good idea to isolate high-voltage stages from low-voltage stages during the first power-on. We suggest using an ac power source with current limiting. It's crucial to always start from the lowest ac voltage for your design to help reduce major blowouts, which can occur from bad soldering, poor assembly or pcb design mistakes.

Assuming no major catastrophe has occurred, measure the ac input voltage and current with appropriately-rated differential and current probes. Use a scope or a power analyzer on the ac input with logging enabled before powering on the device for the first time to capture the inrush currents and transients. If the high-voltage power stage checks out, you can enable the low-voltage control circuit, which will provide a complete picture.

Control circuit debugging

Now let's move on to digital and analog control circuit debugging. This is the stage where you check the control logic—probably the most important, not to mention, complex part of the design. In this stage, you need to test for proper compensation, voltage, timing and frequency responses. First, verify proper switching frequency, pulse width and duty cycle at different loads. To do this properly, measure the modulation signal at the switching device driver during power-on. Next, check the loop frequency by injecting a frequency sweep signal through a wide-band injection transformer in the control loop. Lastly, use a frequency response analyzer to measure the gain and phase of the circuit.

After the high-voltage circuits, low-voltage circuits and control logic have been verified, it's time to check the switching characteristics of the power stage. Start by testing the switching characteristics at no load, nominal load and full load Always double-check that the turn-on, turn-off, duty-cycle and dead-times of all switches (MOSFETS, IGBTs, etc.) are as expected. Also check the VGS signals for noise and bumps. This is important because any unintended glitches on this terminal can lead to turn-on and shoot-through.

Depending on the topology, you should also check the dead-time for sync rectifiers or H-bridges. This process will help ensure that there's no possibility of shoot-through. In order to guarantee that everything is as expected, verify the timing relationships among gate drivers and other related signals.

Since efficiency is usually the primary design goal, it's crucial to minimize any losses that might have been introduced during the design process. Be aware that switching and conduction losses through power switches and magnetics are major contributors to the overall loss of a system, especially for modern high-efficiency designs.

To be safe, we recommend against simply calculating switching and conduction losses based on a datasheet as this can not only be misleading, but also wildly off-base. The reason is that datasheets don't provide a comprehensive loss profile accounting for operating conditions and circuit parasitics. Make sure to also check the rectifier, switches (MOSFETs, IGBTs, etc.) and magnetics for losses when the circuit is active and loaded. More often than not, magnetics are custom-designed and, just like switching devices, they're important to test during operation. This process will help to ensure that the magnetics are properly characterized.

To measure switching loss on an oscilloscope, you can multiply voltage by current and take the mean of the resulting power waveform during turn-on or turn-off. The use of power analysis software as shown in Figure 2 makes this process easier and more repeatable.

Figure 2: Power software automatically performs switching and conduction losses.

Specification check

Now it's time to determine whether or not your design meets certain key specifications, such as line and load regulation, ripple, noise, short-circuit protection, transient response and efficiency.

For load regulation, it's best to use a high-precision DMM directly on the input and output terminals of the power supply. Then sweep the load from minimum to maximum while keeping the input voltage constant during the test. This is very important to ensure consistent results. Be sure to log any changes in output voltage versus load to determine load regulation.

Next, move on to line regulation, which can be tested with a similar setup. Output voltage is measured across a constant load, while input ac voltage sweeps from minimum to maximum. This test is especially critical for universal input power supplies. Now check for noise and ripple at full load using a scope that's optimized for high-resolution measurements or a high-precision graphical sampling multimeter. Although, the scope will provide higher bandwidth, the multimeter will give better accuracy. It's also helpful to log efficiency using a power analyzer while sweeping the input voltage and output load through all the operating conditions.

Now that your prototype is up and running, it's time to see if the design will comply with local power line standards. Most ac-dc power supplies are designed to operate from an ac wall socket. The ac-dc power supplies are also subject to stringent power consumption and power quality standards, such as IEC 62301 standby power and IEC 61000-3-2 current harmonics standards. Compliance with these standards should be tested early in the design cycle to avoid future headaches. Also, make sure that the power analyzer that you're using for testing current harmonics complies with the IEC 61000-4-7 standard for measurement techniques.

When measuring low and distorted standby power, be sure to double-check your connections as incorrect wiring can lead to significant errors. Make sure you always connect the voltmeter channel on the source side of the current shunt so you don't measure the current through the voltmeter impedance.

Far too often EMI and RFI testing is overlooked in the early design stages due to difficulty and expense. However, this stage should never be ignored as you could find yourself stuck with unpleasant surprises and delays as your deadline looms. Make it a habit to test for EMC issues early on in the design cycle. This will help you to avoid unnecessary board turns and missed deadlines.

Fortunately, EMI testing is simple and fast. Grab a spectrum analyzer and a predefined EMI compliance mask to perform the necessary tests to catch those pesky EMI problems before you go to the test house later on in the program. To quickly localize sources of EMI, try using a mixed domain oscilloscope (MDO) with a built-in spectrum analyzer and near-field probes as shown in Figure 3. Armed with your oscilloscope and a schematic, you will be able to measure the spectral peaks and deduce root causes.

Once you've thoroughly tested your first prototype, it's time to shift into overdrive and go for the next revision. As a sanity check, thoroughly repeat all of the testing steps. Once everything checks out, it's time to check reliability. Test the power supply for all input configurations, which is especially important for universal-input power supplies. Next, sweep the load from no load to full load in order to test your power supply for all conceivable operating conditions. Finally, run a lifetime test using environmental chambers, which check the real-life performance of your design.

Figure 3: A mixed domain oscilloscope such as the Tektronix MDO4000C speeds EMI troubleshooting by showing synchronized time and spectrum traces.

If you have followed the measurement steps design process outline here, you're well on your way to delivering a highly efficient, reliable and compliant power supply.

For more information on power supplies from Tektronix Inc, go to http://ept.hotims.com/61399-45

Miniature enclosures optimized for USB interconnect

1551USB IP54 ABS enclosures are miniature with three new sizes: 35, 50 or 65mm long, 20, 25 or 30mm wide respectively, all 15.5mm high. Products can house small printed circuit boards using USB as the external power and signal interconnect and provide generous room to prototype builders and small volume OEMs. Built as a traditional lid and base design, all versions provide a dedicated cut-out for a standard USB Type A plug in one end and have a recess in the lid for an inlay, label or HMI keypad. The two smaller units have two pcb standoffs molded into the base; the largest one has four. Each size is available in five colors with a satin texture finish as standard: RAL 9011 black, RAL 7035 grey, translucent clear, translucent smoke and translucent red. Custom colors can be supplied.

HAMMOND MFG

http://ept.hotims.com/61399-46

10-bit PCIe digitizer boosts performance in small form factor

U5310A 10-bit PCIe high-speed digitizer runs at 10GS/s, with a very-high dynamic range and 10-bit resolution across a wide 2.5GHz bandwidth, allowing the capture of fast transients with high fidelity. Product provides two channels with 10-bit resolution, simultaneous sampling at up to 5GS/s and an unrivaled 10GS/s in interleaved mode. With a dc up to 2.5GHz bandwidth, product provides on-board real-time averaging at full sampling rate and large 4GB memory.

KEYSIGHT TECHNOLOGIES

http://ept.hotims.com/61399-50

Jetting solder paste requires no cleaning

AIM J8 No Clean Jetting Solder Paste is specifically formulated for use in collaboration with a variety of jetting paste equipment manufacturers. Product has proven to provide consistent solder deposits as small as 200µm and is fully compatible with all of firm's no clean solder pastes for use in applications where combining jetted paste deposits with printed paste deposits is required. Product provides an activator system that delivers powerful, durable wetting action accommodating a wide range of profiles producing bright shiny joints without graping defects. Product reduces voiding to as low as <5% on BGA and <10% on BTC ground pads.

AIM

http://ept.hotims.com/61399-47

Heavy-duty stripper handles magnet, enamel, film insulated wire

Model E200 heavy duty wire stripper is robust and handles demanding applications and production line stripping of large magnet, enamel and film insulated wires. Unit will strip most types of film insulation including varnish, enamel, polyester and other resins from round, square and rectangular wires, as well as some types of Litz wire. Product will strip round wire from 1-20 AWG and square wire up to 1/4" x 1/4".

ERASER

http://ept.hotims.com/61399-51

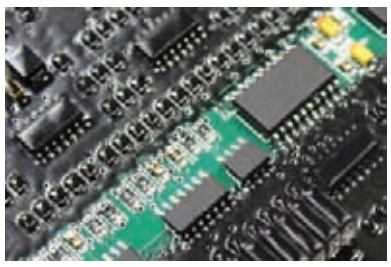

'True' black conformal coating protects pcb performance

Multi-Cure 9451 'true' black conformal coating is a single-component, 100% solids, light and heat curable conformal coating designed to enhance security on printed circuit boards. While improving circuit reliability in harsh conditions, product's opaque black color is intended to cover markings, labeling, other identification as well as sensitive information on the circuit board. Formulated with a secondary heat cure, 9451 can typically be applied and cured at up to 5 mils thick- in one pass- for applications where shadow areas exist. Easily dispensed, material can be applied in multiple passes. It becomes immediately tack free after curing, helping to avoid handling defects

DYMAX

http://ept.hotims.com/61399-48

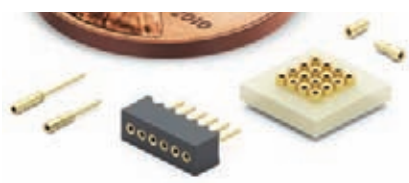

Miniature receptacles cater to diverse applications

Four diverse off-the-shelf miniature receptacles are suitable for use in high density configurations down to 1mm pitch. Each unit contains a three-finger, beryllium copper contact with a diameter range of 0.2mm to 0.33 mm. The contact is characterized by a low insertion force making it compatible with miniature leads subject to bending. Two of the receptacles, 0439-0-15-15-04-27-04-0 and 8210-0-15-15-04-27-04-0, have solder tails for through-hole applications.

MILL-MAX

http://ept.hotims.com/61399-49

Industrial Automation

Putting the control in programmable logic controllers

By Atul Patel, product marketing, high volume logic system connectivity, Texas Instruments

Programmable logic controllers (PLCs) are the workhorse computing systems that help to coordinate and harmonize functions performed by the multitude of sensors, actuators, conveyors and many other electromechanical devices that are found in a modern factory setting. As the name implies, programmable logic controllers communicate software-based instructions to the various subcomponents and subsystems that comprises the PLC.

Have you ever wondered how the various components of a PLC communicate with one another? PLCs use many different interface standards for communicating different types of data. The inter-integrated circuit (I2C) bus is one of the key control interface standards used by PLCs that enables the communication of control information between the various devices and modules that makes up a PLC (Figure 1).

I2C has been around for many years and it has become the go-to control interface standard for most electronic systems designers. I2C consists of a simple two-wire bus interface where one wire carries serial data (SDA) and the other wire carries a clock (SCL) signal. I2C is a shared bus environment where various system components that need to exchange data simply connect to the two bus lines and then follow a simple defined arbitration protocol to gain access and send data on the bus while other devices listen to the bus. In complex systems like PLCs, I2C buses often need to be extended to the next level in order to accommodate multiple sub sets of devices on multiple boards. System designers can extend the capabilities of their I2C implementation by using simple devices such as I2C level translators, buffers, general purpose input/output (GPIO) expanders, and I2C muxes/switches.

I2C level translators (also referred to as I2C level shifters) help design engineers quickly link together components via an I2C bus even though the components may be on different voltage domains. I2C level translators can save system designers a lot of engineering time when selecting components for their system by allowing them to select devices best suited for the task rather than compromising on a feature in order to align on control I/O voltage levels.

For certain PLC applications, such as the main controller board, I2C level translators can be indispensable given the multitude of different device types and voltage rails that need to be supported. In some PLC implementations, engineers have to contend with I2C buses that are capacitively loaded beyond standard recommendations of 400 pF. In these cases, a simple I2C buffer can be used to help 'increase' the loading budget on the bus to allow for more loads to be added without affecting the overall signal integrity of the I2C bus (Figure 2). I2C voltage translators and buffers are available in a wide array of configurations and voltage ranges giving design engineers many possible solutions.

Another type of I2C device that design engineers turn to for help in tough design situations is an I2C IO expander. IO expanders basically enable a system designer to increase the general propose input/output (GPIO) lines available on the system processor. IO expanders are especially handy when the scope of a project changes and new features and functions are added after processor selection has been finalized and the system partitioning has been completed. IO Expanders often allows a design engineer to accommodate new features by simply adding more GPIO that can be provisioned to meet the new requirements (Figure 3).

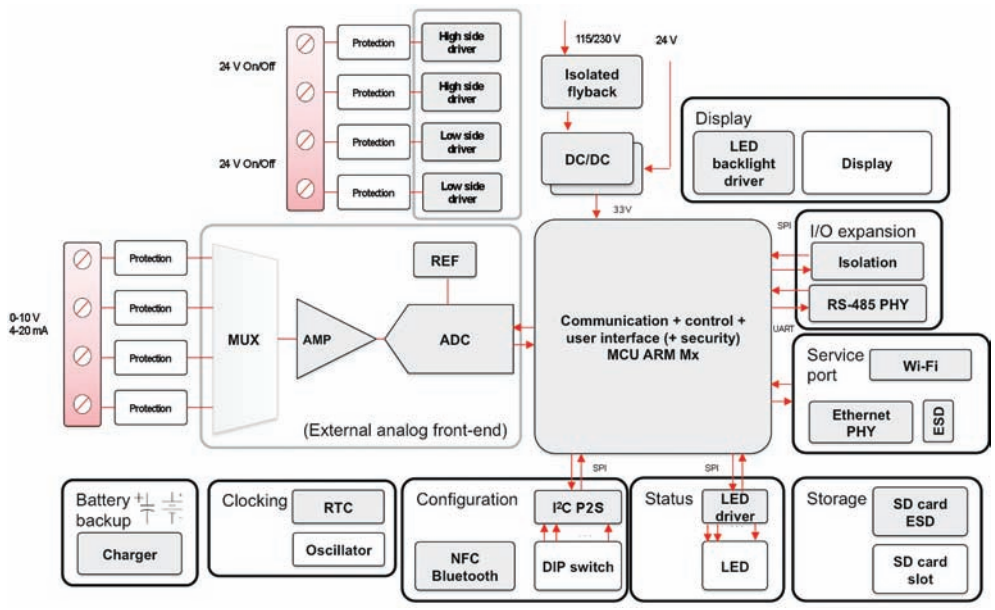

Figure 1: PLC system level- communication of control data between the different sub-modules that makes up a PLC is often through a control bus such as I2C, SMBUS, or SPI.

For PLC designs where processor selection is a critical control point, using IO expanders can save the system designer from having to select a new processor with more GPIO and then having to rework system partitioning and the system software. It is easy to see how IO expanders can be a life saver for systems designers when requirements change. IO expanders are available in a wide range of IO counts, enabling system designers to optimize the amount of GPIO they add to their system.

PLC systems frequently incorporate multiple types for sensors and other peripheral devices that are often connected to the system via a control interface, such as an I2C bus. It is common that industrial systems will need to support multiple copies of a component such as a temperature sensor. Having multiple copies of the same device on an I2C bus can pose a design challenge as these devices can share the same I2C address which results in address conflicts.

Design engineers have to go to great lengths to resolve address conflicts taking up precious engineering time and resources. Address conflicts are especially cumbersome to resolve in industrial systems such as PLCs where many peripheral devices may share a control bus such as an I2C bus. One solution that engineers are turning to more often are I2C switch devices.

An I2C switch device connects to and multiplexes the main I2C bus to multiple new I2C bus ports one port at a time. For example, a 1:8 I2C switch will be able to connect the main I2C bus to one of eight different I2C bus ports. In the case where multiple devices have the same I2C address, the devices can be segregated to their own I2C bus (port), and then each port can be referenced individually by switching to the appropriate port.

Using an I2C switch device enables design engineers to segregate devices, with the same I2C address, to its own I2C bus thereby avoiding any possible address conflicts (Figure 4). An additional benefit of I2C mux devices is that they also can be controlled by I2C, reducing the need for additional GPIO on the application processor. I2C switches are available with multiple port count options, and in many cases multiple I2C switches can be added to a single I2C master bus.

The extensibility brought to the I2C standard by simple devices such as I2C level translators, I2C buffers, GPIO expanders, and switches is helping PLC system designers bring together the multitude of different devices that makes up modern programmable logic controllers.

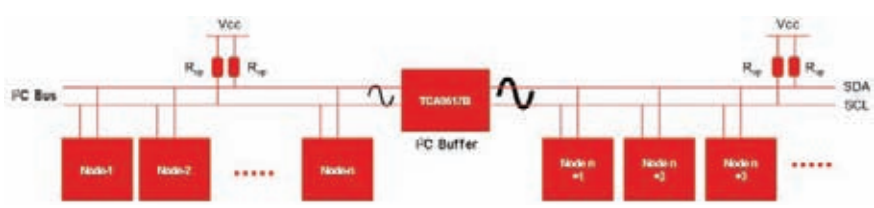

Figure 2: I2C buffer use case.

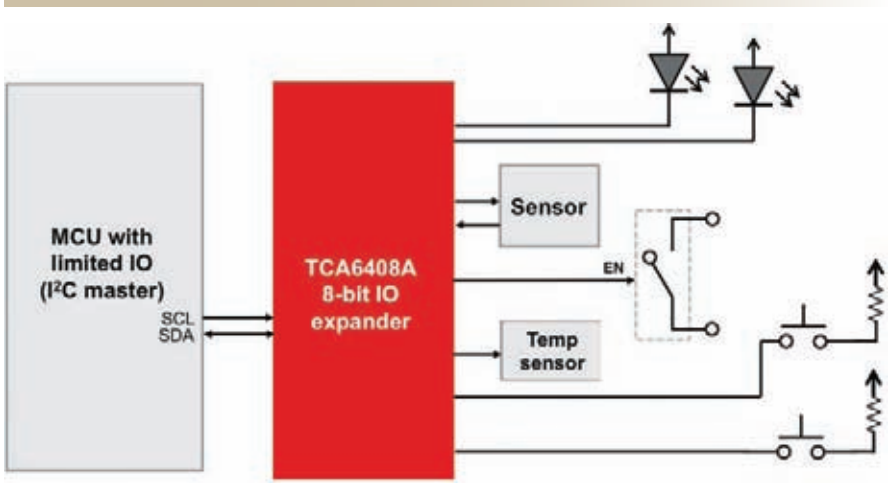

Figure 3: IO expander use case example.

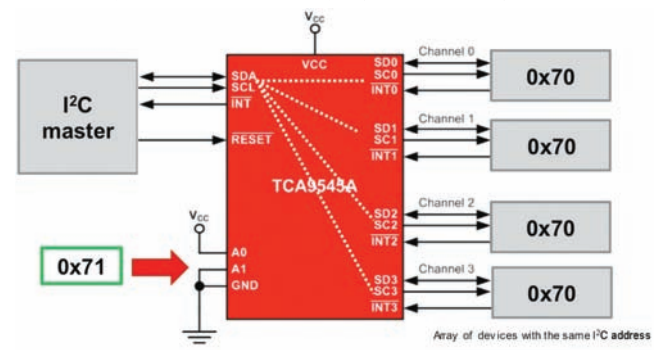

Figure 4: I2C mux use case example.

In fact, the PLC example can be extended to a wider scope of applicability for systems in consumer, communications, automotive, computing and many other market spaces.

I2C control bus implementations are likely to become even more critical for designers as they are faced with making products with more features at lower cost points with more power efficiency. Taking advantage of all that the I2C standard has to offer can truly help a system designer get their design under control.

For more information on programmable logic controllers from Texas Instruments, go to http://ept.hotims.com/61399-52

Harsh environment steel enclosures provides easy access

HWHK Series of easy to open, yet secure, wall mount enclosures are designed to house electrical and/or electronic equipment in harsh industrial environments. Available as standard in 30 sizes in six heights from 24 to 60 inches, five widths from 16 to 36 inches and five depths from 6 to 16 inches, the range is specifically engineered for use in harsh conditions and is frequently opened for internal equipment access. Access is via a durable zinc die-cast handle with padlock provision, which operates a smooth action three point roller latch locking system that improves sealing with minimum effort in opening and closing the door. The rugged full height stainless steel piano hinge enables 180° door opening and the removable hinge pin allows the door to be demounted if required.

HAMMOND MANUFACTURING

http://ept.hotims.com/61399-53

Game style pendant joystick provides immersive, intuitive control

PC Series ergonomic game style pendant controller easily accommodates firm's TS Series miniature proportional joystick and provides either analog voltage or USB output. Handheld device is suitable for controlling unmanned vehicles, robotics and other remote controlled applications. Device was developed to provide a control method that is intuitive and easy to adapt to. Device is molded with high-impact, glass filled nylon and features a modular design to provide OEM's the ability to configure the device as needed.

APEM

http://ept.hotims.com/61399-54

Panel meters deliver bright color TFT smart displays

OM-SGD Series of panel meters with bright color TFT smart graphics displays are available in three screen sizes. Units provide a wide operating power supply voltage range of 4 to 30Vdc and two alarm outputs. Waterproof NEMA 6 (IP67) versions are also available. Using firm's Simple Wizard based configuration software, select from more than 40 standard display configurations to program. Customize colors, text labels, input scaling and units before uploading the selected display configuration to the meter via USB interface to the PC.

OMEGA ENGINEERING

http://ept.hotims.com/61399-55

Infrared cameras deliver full 180° articulating lens

TiX560 and TiX520 Infrared Cameras allow thermographers to easily navigate over, under, and around objects to preview and capture images with ease. Units provide a full 180-degree articulating lens and 5.7 inch responsive LCD touchscreen, delivering 150% more viewing area compared to a 3.5 inch screen. The large screen enables thermographers to quickly identify issues while still in the field as well as easily edit images directly on the camera. SuperResolution mode boosts resolution four times so the normal 320 x 240 (76,800 pixel) resolution of the images captured increases, to 640 x 480 (307,200 pixels) revealing even greater detail.

FLUKE

http://ept.hotims.com/61399-56

Rugged 4-port isolated USB hub delivers 4kV isolation

USB-104-IHUB rugged, industrial-strength 4-port isolated USB hub is small medical/industrial/military grade and provides Tru-Iso signal isolation up to 4kV, extended temperature operation (-40°C to 85°C), high retention USB connectors and an industrial steel enclosure for shock and vibration mitigation. Device makes it easy to expand the number of USB ports and provide up to 4kV isolation between the host computer and connected USB peripherals. Designed to integrate well in any application, the unit is available in a rugged steel enclosure or OEM as a 'board-only' device.

ACCES I/O PRODUCTS

http://ept.hotims.com/61399-57

Tiny USB 3.1 Type C connectors are top mount

Kycon top mount USB 3.1 Type C connectors measure 8.4mm by 2.6mm, small enough to work in most peripheral devices. Products can handle significantly faster data rates than the standard USB 2.0 products. Devices are backward compatible with USB 3.0 and 2.0, and reduce the amount of wires needed to make devices work. Devices generate a 1 5Gbps data rate and are available with dual surface mount or hybrid contacts. Product provides through-hole shield tabs and 10K mating cycles.

WEISSCO

http://ept.hotims.com/61399-58

US supplier delivers 15A Japanese power cords, cord sets

Firm manufactures Japanese 15A power cords and cord sets in its Iowa, U.S.A. facilities, expanding the current line of customizable international cords. Six standard assemblies have been added to the product line, including five cord sets plus a power cord. Firm also provides custom options, such as custom cord lengths, five IEC 60320 C13 connector styles, or custom stripping and color. All of the cord sets will utilize an IEC 60320 C13 connector.

INTERPOWER

http://ept.hotims.com/61399-59

Ultra-low ohmic current sense resistor is high power

Model CSS series of high power, ultra-low ohmic current sense resistor products helps power electronics developers save energy while maximizing sensing performance in designs. Devices provide feature low Temperature Coefficient of Resistance (TCR) for operating accuracy over wide temperature ranges and long term stability. Devices very low resistance levels, low thermal electromotive force (EMF) and high power handling capabilities make them suitable solutions for a variety of industrial applications. Available in both 2 and 4-terminal options, while the 2-terminal model comes in three different foot print sizes, 5930, 3920 and 2512.

BOURNS

http://ept.hotims.com/61399-60

Tiny connector can include 12 power, signal contacts

MiniMax 06 ultra-miniature, high-density connector can include up to 12 power and signal contacts in a footprint of only 10mm, corresponding to a density factor of 0.83. Device includes a configuration with 2 signal and 2 high-power 1.3mm contacts for applications needing 10 Amps or more power, doubling the standard 5 Amps current rating of the existing MiniMax product line. Easy to use device performs in harsh environments and is available as a pre-cabled solution.

FISCHER CONNECTORS

http://ept.hotims.com/61399-61

Push, plug-in connectors combine switch, circuit breaker

Two connectors join 3120 circuit breaker product series providing a circuit breaker/switch combination with push-in terminal (3120-PT) or plug-in (Y31214001) wire termination options when installing circuit protection into their designs. Both connectors provide users with tool-free installation and faster equipment wiring which reduces the installation time and production cost. The plug-in option also provides additional flexibility within designs by allowing user to pre-wire the connector into a wire harness and also quickly replace a circuit breaker with minimal disruption to the harness assembly.

E-T-A CIRCUIT BREAKERS

http://ept.hotims.com/61399-62

Wire-to-wire modular connector delivers design flexibility

Molex SL (Stackable Linear) modular connectors comprise a large number of variations and cabling configurations, including CPA and TPA locking options. Product range is suited for low-power and signal wire-to-board and wire-to-wire applications. Connector System provides additional terminal position assurance (TPA) and connector position assurance (CPA) locking features, suitable for applications used in high-vibration environments.

NEWARK ELEMENT14

http://ept.hotims.com/61399-63

Rugged flash drive five times faster with USB 3.0

USB 3.0 Fischer Rugged Flash Drive ultra-portable, miniature and lightweight memory stick is suitable for the safe transportation and storage of sensitive data in harsh environments. Device is faster, smaller and more user-friendly than the USB 2.0 product introduced to the market in 2011. The read speed is now up to five times faster; standard memory sizes are 32, 64 or 128GB; the body is shorter; and, in order to guarantee secure access, it is now available not only with firm's UltiMate Series interface and MiniMax Series interface.

FISCHER CONNECTORS

http://ept.hotims.com/61399-64

Korean 16A power cords, cord sets

Firm is now manufacturing its own Korean power cords and cord sets in its Iowa, U.S.A. facilities, expanding the current line of customizable international cords. Four standard assemblies with a new Korean 16A plug have been added to the product line, including two power cords and two cord sets. By manufacturing these cords in Iowa, Interpower can also offer custom options, such as custom cord lengths, custom stripping and color. Products are available with either a straight or an angled plug. Cable sizes available include 0.75mm2, 1.00 mm2, and 1.50mm2. The cord sets utilize an IEC 60320 C13 straight connector.

INTERPOWER

http://ept.hotims.com/61399-65

newswatch

Averna acquires US-based Nexjen Systems

Montreal-based Averna, developer of test solutions and services for electronics device-makers worldwide, has acquired 100% of US-based Nexjen Systems for an undisclosed amount.

Nexjen Systems is a full-service integrator with leading expertise in mechanical test systems, RF automated test equipment, industrial control, measurement & monitoring systems, and automation control panels.

"Nexjen Systems represents an exceptional opportunity to expand Averna's presence in the Eastern USA in each of our major market segments as well as tap new resources, solutions, and expertise to offer an extended test & quality solution portfolio," says François Rainville, vice-president of sales & marketing for Averna.

Nexjen Systems, a division of Jenkins Electric Company, was created in 2005 to service Jenkins Test & Measurement customers in the southeast region. Located in Charlotte NC, Nexjen Systems is a National Instruments Alliance Partner.

Darren Lingafeldt, president for Nexjen Systems, added, "We are delighted to join the Averna team and provide our long-standing customers with additional opportunities to deliver their test and quality projects worldwide as well as benefit from Averna's renowned global support."

IEWC unveils new disty centre in Texas

IEWC, Milwaukee WI, launched a new distribution facility in El Paso, Texas this spring. The 22,400-square-foot-facility increases IEWC's capacity to service its customers' wire, cable and wire management product needs with increased local inventory and shipping capabilities.

Jim Wojan, IEWC chief operating officer commented, "This is an exciting time for expansion. IEWC is looking forward to extending our services and distribution footprint into El Paso."

IEWC is a global provider of total connectivity solutions for manufacturers, sub-assemblers, contractors, integrators and end-users with distribution centers strategically located throughout the world.

Automatic cable tie installation system boosts bundling 25%

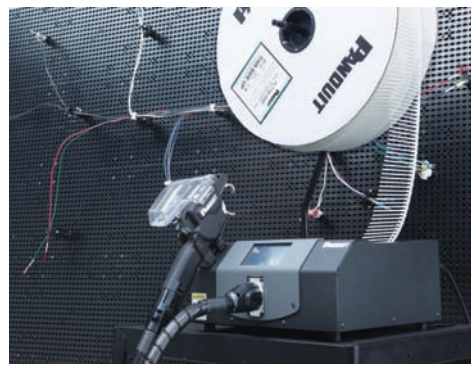

PAT 4.0 next-generation, automatic cable tie installation system maximizes bundling productivity with gains of up to 25% over competing systems and more than six-times the speed of manual cable tie methods. Improved productivity is delivered via a light weight, ergonomic tool head capable of installing up to 84 cable ties per minute while reducing user fatigue and improving tool maneuverability. The redesign of the tool dispenser features an innovative, user-friendly, touch-screen display with an icon-based menu that supports multiple languages.

PANDUIT

http://ept.hotims.com/61399-66

Printed polymer strain gage eliminates need for wires

P-DMS Polymer Strain Gage is a compact and cost-effective solution for measuring pressure based on firm's patented sensor paste technology printed onto a pcb board. Extremely sensitive to slight pressures, a small deformation to the paste generates a change of its electrical resistance generating an analog signal to enable measurement, input and control to a wide range of applications. Requiring no moving parts, device can be very accurate and long lasting and does not need to be connected by wires. This enables compact and affordable designs, as well as eliminating the failure points of wire failure and corrosion. It also eliminates electrical sparking as the key contacts come together.

HOFFMANN+KRIPPNER

http://ept.hotims.com/61399-67

Sine wave inverters serve mobile applications

Freedom Xi new generation advanced true sine wave inverters are for use in all types of mobile applications. Product provides clean ac power, smart battery management and quick connection terminals in a lightweight package. Unit permits users to operate virtually all electronics and appliances within the power range, eliminating compatibility issues associated with modified sine wave inverters. Product's smart battery management maximizes system performance, while inhibiting excessive battery drain. The quick-connect terminals on both input and output make it extremely easy and fast for OEM and installer partners to complete a reliable installation/charger counterpart.

XANTREX

http://ept.hotims.com/61399-68

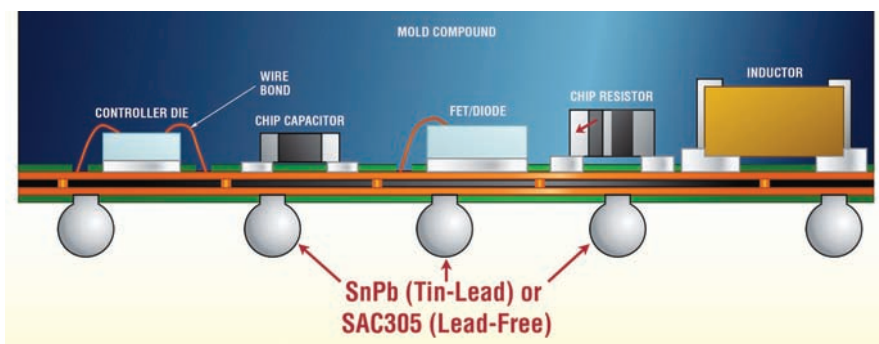

Power products come with SnPb BGA packages

µModule (micromodule) point-of-load power regulator with SnPb BGA packages target applications where the use of tin-lead soldering is preferred, such as in defense, avionics and heavy equipment industries. Device simplifies PC board assembly by providing surface mount vs through-hole pcb assembly. Unit provides complete, encapsulated dc-dc regulator circuit in one BGA package vs high component-count, unverified discrete solution.

LINEAR TECHNOLOGY

http://ept.hotims.com/61399-69

Vibration sensor is smallest in seismic class

D7S Vibration sensor is among smallest seismic class size and can be embedded into essentially any device. Device can take countermeasures directly without reliance on a network or larger system. Devices help with measures to prevent secondary damages, by shutting off and stopping hazardous devices. Sensor can determine damage and help in the restoration process via disaster map creation. This data is used to prevent damage in future earthquakes.

OMRON ELECTRONIC COMPONENTS

http://ept.hotims.com/61399-70

Wireless Designs

Wavefront and Vandrico accelerate industrial IoT through collaboration with wearable OEMs

Wearble Tech Market

436 NUMBER OF DEVICES

$290 AVERAGE PRICE (USD)

ACCELEROMETER MOST POPULAR PRICE

Designing wearable devices that can withstand industrial IoT (IIoT) applications is an ongoing challenge for IoT solutions providers. Few wearable technologies and sensors are suitable for industrial working environments where hazardous conditions, such as extreme temperatures and pressure, make current wearables useless. It's a challenge that Vandrico wants to overcome.

Vandrico is in the business of developing enterprise software that makes data a sixth sense. The firm does this by gathering data through wearables and IIoT sensors and translating it into personalized, actionable insights for improved safety and productivity. Currently headquartered at Wavefront's accelerator in Vancouver, the company is building an ecosystem that is propelling the creation of wearables and IIoT solutions.

Wavefront program is very effective

Working together with Wavefront, Vandrico has been able to use the mentorship and international exposure only offered through this accelerator to propel their 'Connected Worker' software platform for use in industrial applications. "We are proud to have helped Vandrico, who participated in our Global Market Entry Program to Silicon Valley last year, where we facilitated introductions to several global market operators and large eco-system players," says Alan Swain, VP technology & operations, Wavefront. "This particular Wavefront program has been very effective and, in fact, we have taken over 170 companies into 35 different countries."

Vandrico's Connected Worker is a very flexible platform that allows businesses to deploy wearables to their employees, from mining companies, utilities, manufacturers or any industrial enterprise. This software platform is currently being tested in underground mines to increase safety while driving down operating costs.

Significant opportunity for industrial wearable device OEMs

"Our ongoing challenge is to find industrial grade sensors and wearable devices that are the highest possible quality and can interface with our open software platform," says Paola Telfer, chief commercial officer at Vandrico. "In our search, we have created a wearables database that currently tallies 39 industrial devices. Of these, only a handful are suitable for our industrial clients' working environments creating a significant opportunity for industrial wearable device manufacturers who want to leverage the IoT and are looking for applications."

The international wearables design community refers to Vandrico's online database as the current 'industry bible' for finding high quality wearable sensors and devices. Vandrico wants to inspire the creation of more industrial wearables and establish a new industrial ecosystem according to Telfer.

How do you get on Vandrico's wearables list? By creating a high quality device or sensor that is:

- **Wearable -** Device must be worn on the body throughout its use; it should not be carried.
- **Controllable -** Device must be controllable by the user; this could be done either actively or passively.
- **Enhancing -** Device must augment knowledge, facilitate learning or enhance experience.

For industrial IoT applications, it should also be able to withstand large high temperature and pressure changes as well as being waterproof and durable. It is also critical that the battery life for a device survive an entire shift for an industrial worker.

Engineers and hardware designers can seize upon the IIoT opportunity by interfacing with Vandrico's open communications platform. The Connected Worker works best with Android devices but uses open source standards, making it interoperable with most hardware and easy to integrate with other best-in-class enterprise software (such as SCADA and ERPs).

Vandrico's relationship with Wavefront has enabled the company to use best business practices to develop and fine tune their product roadmap for use by an international base of clients. "We've made so much progress," states Telfer, "and we are excited about bringing systems together to make better sense of data being gathered, and offer actionable information to front line decision makers."

"We are looking to collaborate with hardware manufacturers," says Telfer "to accelerate the Industrial IoT revolution, making the future for enterprises smarter, safer and more connected."

IIoT wearables in mining

Being a Canadian company, Vandrico is working closely with the mining sector to leverage their Connected Worker platform. Not only is mining one of Canada's most important economic sectors, it is also a major job creator. Knowing this, Vandrico is testing its platform in several mining operations enabling them to receive data in near real-time, making mines more efficient and safe.

It is now possible for mining operations management to obtain a 3D visualization of people, sensors and equipment from data gathered in the field and displayed in Vandrico's Connected Worker dashboard. Front line operations managers and field workers are empowered to close the gaps between planned and actual operations in underground or open pit mines.

Vandrico's Connected Worker platform is helping miners identify and respond to potentially dangerous issues. Miners are now given gas level warnings based on their proximity to triggered sensors – saving lives. Proximity alerts also protect miners from large moving vehicles when a field worker is in the vicinity of a large vehicle on the move, preventing serious accidents. Mine workers can use a one-touch distress call feature to send an urgent notice to the surface. The surface system is designed to send immediate alerts to key personnel and emergency responders based on the type of incident being reported – reducing response time and risks to other workers. All of this is accomplished using a mine-specific IoT across a Wi-Fi network using data from wearable devices and sensors placed throughout the mine.

What critical functionality is essential when designing durable IIoT wearables and sensors?

- Stand-alone wireless connectivity (SIM and/or WiFi enabled) which doesn't rely on tethering via Bluetooth to a smartphone
- An interface to communicate medium-fidelity information.
- A method for the user to respond, which can be operated in all industrial environments (e.g. robust tactile buttons or rotary switches).
- Means to attract the user's attention in loud industrial environments (using a combination of vibrators, speakers and/or lights).
- The device operating system must be flexible and completely open to customization.
- The device or sensor must be sufficiently durable and waterproof (IP67 standards).

Vandrico issues IIoT wearables challenge

In an attempt to get industrial wearable device manufacturers to accelerate the Industrial IoT revolution through collaboration, Vandrico Inc., a Vancouver based enterprise wearables software company, has launched a hardware challenge aimed at the engineering community.

Vandrico is in the business of developing enterprise software that makes data a sixth sense. The firm does this by gathering data and translating it into personalized, actionable insights for improved safety and productivity. Currently, there is a shortage of suitable industrial wearable devices on the market for use in IoT applications, according to Paola Telfer, chief commercial officer at Vandrico, also a company resident in Wavefront offices.

Vandrico is looking to collaborate with hardware manufacturers to accelerate the Industrial Internet of Things (IIOT) revolution, making the future for enterprises smarter, safer, and more connected. The challenge – if you have an industrial wearable that you believe can pass a one-week durability test in an underground mine this September, Vandrico wants to hear from you!

Opportunity:

- Be the chosen hardware manufacturer for a full underground mining deployment of 1000+ units, in Q1 2017.
- Receive in-field, enterprise user experience (UX) feedback.

Required Functionality:

- Stand-alone wireless connectivity which doesn't rely on tethering via Bluetooth to a smartphone. (Either Wi-Fi or Cellular depending on environment).
- An interface to communicate medium-fidelity information.
- A method for the user to respond, which can be operated in all industrial environments. (e.g. robust tactile buttons or rotary switches).
- Means to attract the user's attention in loud industrial environments. (A combination of vibrators, speakers and light is the best we have found to date).
- Device's operating system must be flexible and open to customization.
- Device must be sufficiently durable and waterproof (IP67).
- Applications are open until August 30, 2016.

For more information or to register for the hardware challenge go to:
http://vandrico.com/hardwarechallenge

High performance Gen 3 PXIe chassis boosts data streaming

Gen 3 PXIe chassis and set of Gen 3 system components designed for complex, high-performance applications. Doubling the system bandwidth, products improve data streaming for capture/playback applications, such as 5G and electronic warfare. Products also provide an improved platform for large multi-channel and multi-chassis PXIe test systems for applications, such as MIMO and PA/FEM. Products include an 18-slot PXIe chassis with x8 Gen 3 PCIe links to each slot, a set of single and dual-port Gen 3 PXIe system modules and PC host cards, and an improved PXIe embedded controller, now capable of Gen 3 performance.

KEYSIGHT TECHNOLOGIES

http://ept.hotims.com/61399-71

Tiny Bluetooth SoC targets next-gen wearables, IoT

nRF52832 Wafer Level Chip Scale Package (WL-CSP) high-performance single chip Bluetooth low energy SoC in a tiny package targets next-generation wearables and space-constrained IoT applications. Device has a super-compact 3.0 by 3.2mm footprint that occupies one quarter of the footprint area of firm's standard 6 x 6mm QFN48-packaged nRF52832, yet offers the same full feature set.

NORDIC SEMICONDUCTOR

http://ept.hotims.com/61399-72

RF measurement option reduces test time on 4G networks

CPRI RF measurement capability in firm's E series of Site Master, Spectrum Master, and Cell Master handheld field analyzers simplifies and lowers the cost of testing Remote Radio Heads (RRHs) installed atop 4G towers. Option reduces network OpEx by allowing wireless carrier engineers, technicians and contractors responsible for wireless networks to identify interference sources on the radio uplink at ground level, reducing the use of unnecessary and costly tower climbing crews. 10x faster than competitive solutions, product captures all interfering signals, including intermittent interferers, easily. A Spectrum/Spectrogram Tune & Zoom function allows users to zoom into an area of interest on a displayed signal to more closely examine interfering signals and better identify their origin.

ANRITSU

http://ept.hotims.com/61399-73

Miniature isolated analog I/O modules come with user-defined I/O ranges

microBlox isolated signal conditioning modules (175 models) can safely interface a wide variety of voltage, current, temperature, frequency, and other field signals with a ±5V or 0-5Vdc output to host measurement & control systems. Users can select modules with fixed ranges or wireless configuration via Bluetooth on an Android or iOS mobile device. Firm's free Agility app for smartphones and tablets simplifies setting custom I/O ranges and optional alarm functions.

ACROMAG

http://ept.hotims.com/61399-74

GaN power amplifiers suit weather, marine radar applications

Qorvo TGA2622-SM and TGA2624-SM X-band GaN power amplifiers operate from 9GHz to 10GHz and come in 7mm x 7mm air-cavity, laminate-based QFN packages. For both devices, the RF ports are internally dc blocked and matched to 50 ohms, enabling simple system integration. Suited for pulsed applications, devices deliver improved power, PAE and gain performance that can save costs on existing platforms while enabling the development of future systems.

RICHARDSON RFPD

http://ept.hotims.com/61399-75

Low-cost development platform enables IoT projects

NXP FRDM-KW40Z low-cost development kit is enabled by the Kinetis W series KW40Z/30Z/20Z (KW40Z) family and is suitable for IoT designs. Built on the ARM Cortex-M0+ processor, product provides an integrated 2.4GHz transceiver supporting Bluetooth Smart/Bluetooth Low Energy (BLE) v4.1 and/or IEEE 802.15.4standards. Kit contains two boards, enabling point-to-point, out of the box connectivity. Each board can be configured as a Freedom development board or as a Freedom shield for connection to a host processor. hardware is form-factor compatible with the Arduino R3 pin layout, providing a broad range of expansion board options.

NEWARK ELEMENT14

http://ept.hotims.com/61399-76

Mid-range RFID reader combines hardware durability, software flexibility

Ha-VIS RF-R300 mid-range UHF RFID reader comes with a compact cast aluminum housing and rugged M12 connectors built in, designed for extremely reliable, long-lasting performance in rough environments. By employing the device in its RFID data network, a user can pinpoint precisely which loads are on conveyor belts, which products are on the assembly line or which train is at the platform. Based on a MICA platform, product has Power over Ethernet (PoE) and eight configurable IOs, while boasting a maximum UHF output power of 500mW at its two antenna ports and supports several UHF antenna types, both standard ones.

HARTING

http://ept.hotims.com/61399-77

Rechargeable button cells boost reliability in wireless apps

CoinPower Series of lithium-ion rechargeable micro batteries consists of CP 1254 A2, CP 1654 A2 and CP 1454 A3 parts, supporting a voltage level of 3.7V and capacities of 50mAh, 100mAh, and 85mAh, respectively. Devices boast six patents and provide low self-discharge and reliable signal transmission at high pulse loads to ensure dependability, an extended shelf life of more than one year, and a fast charge capability. Button cells may be recharged over 500 full cycles while maintaining at least 80% of their initial capacity. Devices come in diameters ranging from 12.1mm to 16.1mm and weigh from 1.6g to 3.2g. All parts measure 5.4mm high.

VARTA MICROBATTERY

http://ept.hotims.com/61399-78

newswatch

Bandwidth, IoT, 5G drive decade-high attendance at IMS2016

Nearly 10,000 attendees flocked to this year's IEEE MTT-S 2016 International Microwave Symposium (IMS), marking a 32% increase in show attendance since 2013 and validating IMS as an essential event for the wireless industry.

The six-day event, held in San Francisco's Moscone Center this May, drew nearly 3,000 attendees to the technical program and featured a record-breaking 625 companies on the sold-out show floor. IMS, the annual conference and exhibition of the IEEE Microwave Theory and Techniques Society (MTT-S), is the premier international meeting for technologists involved in all aspects of microwave theory and practice.

RF designers, researchers, developers & academics

IMS attendees comprised RF designers, researchers, developers and academics representing more than 60 countries including China (4% of attendees), as well as Japan (3%), Korea (3%), and Germany (3%). Of attendees at this year's show, 42% were first-time attendees, and IMS2016 saw an increase in overall attendance of 15% over IMS2015.

"IMS is the number one trade-show in the microwave and RF industry and is rapidly becoming known as a must-attend event in the broader technology sector," says Dr. Amarpal Khanna, IMS2016 general chair. "Microwave and RF technologies are the backbone of emerging innovations that will shape the future of technology– everything from virtual reality to autonomous driving. It's inspiring to see the industry's greatest innovators come together each year to exchange ideas that turn into tomorrow's ground-breaking technologies."

'Connectivity crunch' a hot topic

The 'connectivity crunch' was a hot topic of this year's show, with standing-room only technical sessions on millimeter waves and other approaches for overcoming bandwidth and spectrum issues. Human-technology interaction was also a major theme; "father of the cell phone" Dr. Martin Cooper set the stage discussing how wireless connectivity has the opportunity to improve the interaction between humans and technology during his plenary session presentation and University of California, Berkeley Donald O. Pederson distinguished Professor Jan M. Rabaey spurred discussion on the human and technology interaction as it relates to the future of wearable devices at the closing session.

Technology heavyweights including Facebook, The Boeing Company and Virginia Tech discussed the technological and economic challenges for the future space-based internet during the evening 'rump' session. Returning for its second year, the Wireless Wonders Pavilion showcased microwave and RF-based wearable electronics from exhibitors including Automatic Labs, Maja Systems/Rhode & Schwarz, Qualcomm and Zentri. The pavilion also highlighted a cooperative virtual reality experience in which players had to work as a team to complete a virtual mission to Mars.

Additionally, special sessions hosted by the Women in Microwaves, which presented a panel on leadership, and the Young Professionals in microwaves, which held a panel on the future of millimeter waves, reinforced the industry's commitment to diversity and its future leaders.

NI founder delivers concluding keynote

The show wrapped with a keynote from National Instruments' president, CEO, and co-founder Dr. James Truchard around the importance of 5G, in which Dr. Truchard explained how a software-based approach will enable the explosion of wireless connectivity. The transition to 5G will be a major theme at IMS2017.

"5G is the next horizon for wireless connectivity and the catalyst to make the Internet of Things a universal reality, but the transition still presents a number of challenges for the microwave and RF industry to address," says Dr. Wayne Shiroma, IMS2017 general chair. "The sharing of knowledge and collaboration that IMS enables are the key to bringing 5G, and technologies beyond it, to life."

IMS2017 will be held June 4-9, 2017 at the Hawaii Convention Center in Honolulu.
www.ims2017.org

Spectrum monitor locates illegal, unlicensed interfering signals

MS27100A Spectrum Monitoring Module brings firm's field-proven, industry leading RF spectrum analysis technology to OEM applications. Unit can be integrated into existing custom hardware to locate illegal and unlicensed interfering signals within wireless networks. Product provides a high-performance RF engine in an extremely compact form factor, allowing it to be easily designed into any spectrum analysis system. Engineers can write their own monitoring program applications using available SCPI commands to provide customization and flexibility.

ANRITSU

http://ept.hotims.com/61399-79

Common mode choke optimized for super speed signal line noise suppression

0805USBN Series common mode chokes measure 2.0 x 1.2mm, with a maximum height of 0.93mm. Devices provide up to 6.5GHz differential mode 3dB cutoff frequency and up to 35dB common mode noise attenuation across a wide frequency range up to GHz band, making them suitable for noise suppression in super high speed signal lines such as USB 3.x, HDMI 2.0, HDBaseT, DisplayPort, and DVI. Devices provide low DCR (0.11 to 0.63 Ohms) and current ratings up to 0.5 Amps. Product comes in 8 impedance values and are halogen free, featuring RoHS compliant matte tin over nickel over silver-platinum-glass frit terminations.

COILCRAFT

http://ept.hotims.com/61399-80

3W dc-dc converter comes in 14 pin SMD package

AM3HW-NZ series 3 Watt dc to dc converters offer industrial operating temperature range from -40C to 85C with derating starting above 71C and working at 85C at 60% loading and continuous, hiccup mode, short circuit protection. Products come in a 14 pin SMD package with industry standard pinout, with 9-36V or 18-75Vdc inputs, an I/O isolation rated at 1500Vdc and tested during manufacturing for 60 sec. Product series is UL listed and features very low no load consumption of ≤0.12W and remote On/Off control to facilitate the use in sensitive to energy consumption applications.

AIMTEC

http://ept.hotims.com/61399-81

Socket operates up to 30GHz bandwidths, less than 1dB insertion loss

SG-BGA-9002 high performance elastomer socket for 25mmx25mm BGA package with 0.65mm pitch. Device operates at bandwidths up to 30GHz with less than 1dB of insertion loss (GSSG configuration). The contact resistance is typically 20 milliohms per pin. Network analyzer reflection measurements for the G-S-S-G case were taken with all except the pins under consideration terminated into 50 Ohms. Device is mounted using supplied hardware on the target pcb with no soldering.

IRONWOOD ELECTRONICS

http://ept.hotims.com/61399-82

MOS FET relay delivers high switching capacity

G3VM-63G MOS FET Relay with SPST-NC contacts and SOP 4-pin package provides high switching capacity with SPST-NC and low capacitance between output terminals with low on resistance. Device features a 60V load voltage, 0.5A switching current, average on resistance of 1ohm and higher ambient operating temperature range of -40C to 105C, contributing to flexibility in design.

OMRON

http://ept.hotims.com/61399-83

Shelf managers support OpenVPX, Legacy VME/CPCI systems

SHM200 shelf manager complies to VITA 46.11 for shelf management of OpenVPX systems. There are also configurations for use in legacy VME/64x and CompactPCI systems. Product is IPMI 2.0 compliant and is available in various size formats. Unit provides temperature monitoring of at least six temp sensors, monitoring of 12 fans and eight voltage monitors. Product has fan PWM control and up to 16 digital inputs and outputs.

PIXUS TECHNOLOGIES

http://ept.hotims.com/61399-84

Data logger comes with attachable, exchangable input modules

Graphtec GL100 Compact Multifunction Data Logger provides attachable and exchangable input modules for temperature, humidity, acceleration, carbon dioxide, luminance, UV, voltage, current, logic and pulse. Unit stores recorded readings onto internal memory or MicroSD card and delivers a 0.5 second to 30 seconds and 1 minute to 60 minutes user-selectable sampling rate. Device supports up to four channels and is available in USB and wireless LAN communication versions.

TRADEPORT ELECTRONICS

http://ept.hotims.com/61399-85

Electronically commutated fans boost efficiency

EC Series of Electronically Commutated (EC) fans provide a low power, dual speed, energy-efficient cooling solution for large, power hungry equipment. Fan speed settings can be pre-programmed at the factory to simplify installation and improve power savings. Devices utilize a brushless dc motor with a single or universal ac input. Units incorporate voltage transformation within the motor to provide low power ratings of 8W at low speed and 26W at high speed.

ORION FANS

http://ept.hotims.com/61399-86

Knock down server rack rated for heavy duty applications

KD Series knock down server open rack is suitable for use in server rooms, data centers and other applications requiring multiple open racks. With knock down (KD) assembly, unit can ship for a much lower dimensional weight than all-welded frames. Maximum weight capacity is a full ton (1,000# with casters), which more-than-handles a maximum load of modern 19" mount servers and peripherals. Standard rack measures 75 x 23 x 36 inches and weighs less than 120lb. The design is based on 16 main 14 gauge structural steel sections, including four 41U rack rails. Field assembly takes less than 30 minutes.

EQUIPTO ELECTRONICS

http://ept.hotims.com/61399-87

Wearable Tech & Sensors

Shaping tomorrow's wearables with today's sensors and wireless technologies

By Deryl Kimbro, senior business development manager and Mehul Udani, general manager, connectivity solutions group, Murata Americas

More than 50 years ago, Intel co-founder Gordon Moore predicted that the overall processing power of computers would double every two years into the foreseeable future. Moore's Law, as it was aptly coined, denoted that the number of transistors per square inch on integrated circuits would also double every year since their invention. Based on that hypothesis, the wearable devices that we are so attached to – literally and figuratively – may have been inevitable.

However, the foresight that Moore demonstrated could not have predicted how this technology would end up constructing and defining markets so many decades later. Even 10 years ago, fitness trackers were still in their infancy and represented just a glimpse of things to come. Now many analysts and stakeholders agree that the market has moved from its innovation to adoption stage. Of course, that brings new opportunities and challenges.

Miniaturization has always been a constant factor

With wearable devices, miniaturization has always been a constant factor, but now lower power consumption is also a leading driver. With lower consumption comes a huge demand for greater battery life. Given that, electronics manufacturers are developing sensors that simultaneously allow a decreased footprint and extended battery life.

A critical focus area is on medical applications. With an aging population, many companies are looking towards sensor technology to measure the wellness of elderly care patients – especially remote monitoring functions. Someone's vital signs, exercise habits, sleep patterns, etc. can be shared with doctors and family members throughout their daily lives at home, and not just from a hospital. From the old to the young, the applications are virtually endless. Consider this: parents can now buy baby socks that monitor an infant's heart and oxygen rates just as easily as they can a car seat or box of diapers.

OEMs actively using science and technology expertise

As more wearable electronics hit the market every day, manufacturers are actively using science and technology expertise and focused R&D efforts to anticipate and meet ever-evolving industry demands. Not only do developers require miniaturized, low-power consuming, highly-reliable building blocks, these solutions also have to deliver advanced connectivity. Enter wireless communications products, design challenges and all.

On the connectivity front, Bluetooth Smart 4.0/4.1 technology communicates readily with consumer devices such as cell phones, tablets, laptops or the many other Bluetooth Smart Enabled applications, allowing greater wireless connections to sensors and other devices. Moreover, the rollout of Bluetooth Smart 4.2 increased the need for streamlined functionality and connectivity. Security support is also becoming key due to HIPPA regulations. Further, the Bluetooth Special Interest Group (SIG) in June announced that its next release, Bluetooth 5, will launch later this year or early next. The technology promises significantly increased range, speed, and broadcast messaging capacity to truly enable the future wearable market.

Wi-Fi with 11ac technology can help medical apps

What other technology can drive this? Wi-Fi with 11ac technology can help medical applications that need super high throughputs. 11ac technology brings Ethernet speeds to wireless by enabling highly demanding applications. The next generation of 11ac technology allows high throughput at very low power levels. This feature makes it very well suited for the wearable market, since transmissions happen at a very high speed in a short time but stay in sleep mode otherwise.

Over the next several years, the wearable market will be driven by smart wearables such as activity trackers, smartwatches, and smart clothing in applications ranging from industrial, and tourism to, of course, healthcare. Those manufactures that are continually pushing the envelope and actively at the forefront of realizing this connected world, will be poised to carve out a stake in the challenging, dynamic, and fascinating wearables market.

For more information on sensors for wearable designs from Murata Americas, go to http://ept.hotims.com/61399-88

Will conductive inks help wearables go truly wearable?

by Dr Khasha Ghaffarzadeh, Research Director, IDTechEx

The first generation of wearable devices are constructed using mature, rigid technologies put inside a new box that can be worn. These are often bulky devices that are not truly wearable in the sense that our clothes are. This is, however, beginning to change, albeit slowly. New conformal, clothing-based components are emerging. Further announcements last week from Google's Project Jacquard, in collaboration with Levis, shows that the technology and fashion industries are starting to make real progress through collaboration.

This project is but one example of work being done and an IDTechEx Research report finds that electronic textiles (e-textiles) are on the cusp of rapid growth, forecasting the market to increase from under $150m in 2016 to over $3.2bn by 2026. Many still argue that e-textiles are solutions looking for a problem, but IDTechEx Research finds that there is tremendous interest and progress right across the value chain. This includes material suppliers, traditional textile companies, contract manufacturers, brand owners, etc.

Conductors will inevitably play an indispensable role in any e-textile system. Naturally, therefore, conductive inks suppliers are all very interested. In parallel, conductive ink suppliers face challenging conditions in their traditional well-established market sectors.

For example, the report says that the combined market for the previously well-established photovoltaic and touch screen edge electrodes will achieve a measly CAGR of 1-2% between 2016 and 2026. The latter segment is forecast to decline whilst growth in the former will be hugely constrained thanks to the decreasing average silver consumption per cell.

In fact, these traditional markets are increasingly characterised by low demand growth, intense competition, high customer price sensitivity, and low customer loyalty. This is yet another reason why conductive inks suppliers are hugely interested in new high-growth applications areas such as e-textiles.

Toronto firm gives hope to Alzheimer's sufferers

Two wearable devices created by Toronto-based Vielight Inc. appear to be demonstrate promising outcomes for patients affected by Alzheimer's disease or dementia, according to a randomized placebo-controlled pilot study conducted last year.

Using the firm's patented Vielight 810 Infraredand patent-pending Vielight Neuro wearable devices, the study presented the arrest or reversal in the decline of Alzheimer's Disease. The patients used the 'Neuro' for 20 minutes once or twice a week and the 'Vielight 810' every day for 25 minutes. The results of this pilot study are significant and strongly suggest that the treatment for people with moderate-severe cognitive impairment can result in significant clinical improvements.

The technology involved the science of low level light therapy (LLLT) or photobiomodulation therapy (PBMT), a process in which exposure to low-level light or light emitting diodes stimulate cellular function leading to beneficial clinical effects.

Vielight specializes in developing wearable photobiomodulation therapy (PBMT) devices to improve well-being. Their devices are used in research projects in institutions globally, including Harvard Medical School and Boston University. After 10 years production, Vielight has more than 15,000 devices in the field, used by consumers around the world with no reported major side effects.

Wearable, mobile devices boost flexible displays

As the popularity and penetration of wearable and mobile devices increase, so too will demand for innovative flexible displays. In fact, revenue from flexible displays is expected to increase more than 300%, from just (all figures USD)$3.7-billion in 2016 to $15.5-billion in 2022, according to IHS Inc. Flexible displays will comprise 13 percent of total display market revenue in 2020.

Samsung Electronics and LG Electronics launched the first smartphones with flexible active-matrix organic light-emitting diode (AMOLED) displays in 2013, and both companies continue to adapt flexible AMOLED displays for their smartphones, smartwatches and fitness trackers. Inspired by these successes, other mobile manufacturers are now developing their own flexible-display devices.

Canada put on the smart textiles map

New alliance to create visibility for emerging sector

The National Research Council of Canada (NRC) has teamed up with industry members to officially form the Smart Textile and Wearables Innovation Alliance, aimed at creating visibility for the smart textile industry and position Canada as a global leader in this emerging sector.

The Alliance will regroup 34 Canadian companies from all levels of the supply chain to share ideas and develop products that will revolutionize the smart textile industry. Smart textiles and wearables have digital components, including small computers, sensors and electronics, embedded in them and give them added value, such as communication, data collection and energy transfer.

"Textile is rapidly becoming the most effective wearable technology form factor. Smart textiles and wearables have the ability to provide a holistic picture of the body, enhance everyday life and even transform the future of the health care systems," says Tony Chahine, chief executive officer, Myant & Co. and member of the Alliance.

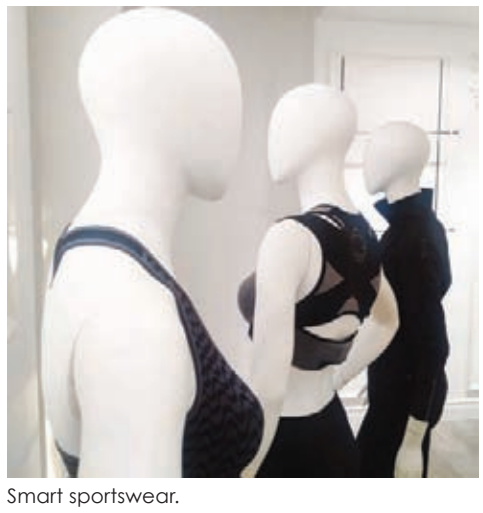

Smart sportswear.
Photo credit: Myant & Co.

Jacket with integrated printed lighting element.
Photo credit: Myant & Co.

Industry-led, grassroots initiative

Facilitated by the NRC, this industry-led, grassroots initiative will encourage the formation of supply chains to enable the development and commercialization of next-generation technologies in targeted areas such as sport and fitness, self-care and wellness, medical diagnostics, industrial wearables and interactive tracking.

"NRC recognizes that domestic supply chains are essential for the advancement of smart textile and wearable technologies," explains Thomas Ducellier, executive director, printable electronics flagship program at NRC. "We are proud to be facilitating the Smart textile and Wearables Innovation Alliance to allow companies to be part of a collaborative ecosystem and make revolutionary breakthroughs."

The NRC is currently providing administrative support for the Alliance out of its offices in Ottawa, but the membership is spread out across the country from Vancouver to Montreal, where the next gathering of the Alliance will be held, respectively on September 30th and October 19th. In terms of governance, the NRC is facilitating this grass-roots, member-directed network. Future governance will be left for members to decide later on.

"At this moment, members want a venue to share information and network with their peers, which does not require formal structure," Ducellier adds. "As the Alliance matures and moves on, it might choose to formalize its construct or join existing associations that can provide such structure. This will be decided on by the members themselves when they feel that a more professional organization is required."

Focus of events is networking & matchmaking

The importance of information sharing within its membership is underscored by such networking events planned for Vancouver on September 30th and Montreal on October 19th. The focus of both events will be networking and matchmaking. Ducellier says participants will be able to present what they have to offer others and what they are looking for from other attendees in order to facilitate the establishment of supply chains and partnerships.

"When NRC began to investigate the needs of companies in the sector, understanding what other organizations were doing in the field and securing partnerships were the main reasons companies cited as their top priorities," says Ducellier. "The Alliance was conceived to address this need and is therefore constructed as a networking venue where all key stakeholders in the field can meet and exchange."

Canada has a surprisingly large number of companies involved in the field of smart textile and wearables, according to Ducellier. This is little known both globally and even domestically. Ducellier says that was the observation that led to the creation of the Alliance.

So far, the association has identified upwards of 60 companies active in this field across the country, which clearly positions Canada as an emerging leader in this field. The applications cover a broad range of applications, from sports to health and wellness, including industrial, etc. and a wide range of company sizes from small start-ups to more established companies, with the former being more prevalent than the latter.

Toronto engineer designs body temperature-regulating wearable

Sola's armband keeps wearers comfortable regardless of the elements

Sola has launched an Indiegogo campaign for the world's first wearable device that regulates the wearer's body temperature, detecting current body temperature and changing it by as much as 0.4 degrees Fahrenheit on-the-fly.

The wearable heating system is worn as an armband, providing controllable heat in any environment. Powered by a 2000mAH battery, Sola can provide up to four of continuous heat. It's operated by a single button which powers the device on or off. Once on, patent-pending smart algorithms collect information from dual temperature sensors, then determine the precise amount of heat to deliver.

Sola works by regulating the temperature of the blood. As blood flows through the arm, it's warmed slightly by Sola, before being naturally circulated throughout the rest of the body. This slight increase in temperature can have a dramatic impact on comfort level of the wearer.

Smart monitoring system monitors temperature and current

Sola features three layers of protection for a safety-first approach. First, each battery has built-in current and voltage protection. Second, a physical fuse will shut Sola down if it detects too much current. Third, a smart monitoring system monitors temperature and current, shutting down the device if either gets too high.

Sola is made of medical-grade silicone and laser-cut neoprene fabric, so it feels sturdy on the arm, looks great, and is designed to last. The subtly curved edges and soft-touch silicone case accentuate the meticulous attention to detail in Sola's design, and one-button operation makes the device dead simple to operate.

Sola was created by Jason Yakimovich, an engineer by trade from the University of Toronto and a Canadian by residence. Jason founded Divvyi, a file-sharing app, and FuelWear, a heated clothing base layer. Sola is the result of his extensive engineering know-how, the help of UofT Hatchery, his experience at FuelWear and the frigid Canadian climate.

Sola keeps its wearers comfortable whether they're trekking through the November foliage or simply lying around the house. It's perfect for anyone who regularly spends time outdoors, or for anyone who wants to save money on their heating bill. If features USB charging, automatic shut-off, premium neoprene construction, an LED indicator and, of course, smart temperature control.

ProductSource

product source feature **product** source feature **product** source feature

Unique Technology In Fusion Splicers

Now available at Gap Wireless, the Swift K11 Fusion Splicer by America Ilsintech is an advanced core-alignment type fusion splicer for the medium and long range optical circuit LAN, CATV, and FTTx. With world-fast splicing and sleeve heating time, it delivers high precision performance with extremely low loss.
The future of splicers is here.

GAP WIRELESS
www.gapwireless.com
Tel: 855.826.3781 • info@gapwireless.com

http://ept.hotims.com/61399-12

http://ept.hotims.com/61399-13

Omron's 2SMPB Absolute Pressure Sensor

High accuracy and small size absolute pressure sensor with low current consumption. Built in low noise 24 bits ADC. Digital control and output via I2C interface. Automatically power down non-working circuit to minimize current consumption. Individual calibration parameters stored in one time programmable non-volatile memory.
For more information go to: http://bit.ly/29CbxTv.

OMRON ELECTRONIC COMPONENTS
components.omron.com
Tel: 847-882-2288
components@omron.com

http://ept.hotims.com/61399-14

Schroff Interscale M – Electronic Cases

This flexible solution from the Schroff brand is available as a Standard version in 21 sizes from stock, a Modified version with fixed modification options and a fully Customized version for individual requirements. The Interscale M case also has a range of special accessories available.

Features: • Modular 19" case consisting of 4 easy-to-assemble parts • Plain case • Ingress protection IP 30 (plain version) • Color RAL 7016.

J-SQUARED TECHNOLOGIES INC
www.jsquared.com
Tel: 855.365.2188 • inforequest@jsquared.com

http://ept.hotims.com/61399-15

ME-IO series for fieldbus couplers and controllers

Phoenix Contact introduces the ME-IO housing product family.
ME-IO housings are designed to provide a high density solution for I/O in a modular, customizable format that can be built to create a custom control platform.
The ME-IO housing is a complete, off-the-shelf solution that can be configured to fit the customer's needs.

PHOENIX CONTACT
www.phoenixcontact.ca
Tel: 800-890-2820 • cdinfo@phoenixcontact.ca

http://ept.hotims.com/61399-16

High Density, High Current Inductors

MPS's new HWI4427 and HWI4434 series of Helical Edge Wound (HEW) High Current Inductors offers the highest current density package size in the industry. These inductors offer a wide range of inductance values from 1.4µH to 83µH and rated current up to 122 amps or higher in a very compact package. Various mounting options are also available, including mounting clip and base for extra, added support and resistance against vibration and shock.

MPS INDUSTRIES
http://magnetic-components.mpsind.com/category/high-current-fixed-inductors
Contact email: sales@mpsind.com

http://ept.hotims.com/61399-17

Omron's NEW G5RL U/K Energy-Saving PCB Latching Relays

Omron's new G5RL-U/K latching relays feature 16A carry current and capacity to handle high inrush currents. Creepage distance 8 mm between coil and contacts.
10 kV impulse withstand voltage.
Ambient operating temperature 85°C. Suitable for TV-8 rating (SPST-NO).
For more information go to: http://bit.ly/1JFEYvY.

OMRON ELECTRONIC COMPONENTS
components.omron.com
Tel: 847-882-2288
components@omron.com

http://ept.hotims.com/61399-18

http://ept.hotims.com/61399-19

Unrivaled Flexibility for Cable Shield Cutting

Schleuniger's new ShieldCut 8100 semi-automatic machine can safely and quickly cut and remove the braided shield layer from most round and out-of-round cables, eliminating countless hours of manual labor. It is equipped with reliable drives and high-performance control software for repeatable, high-quality results that cannot be achieved with manual shield processing.

SCHLEUNIGER
www.schleuniger-na.com
905.827.1166 | sales@schleuniger.com

http://ept.hotims.com/61399-20

products on review

High efficacy LED boosts lumens-per-watt by 25%

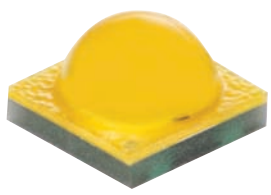

XT-E LED family includes a High Efficacy (HE) option that delivers a 25 percent increase in efficacy and provides a guaranteed minimum efficacy of 164 LPW at 85°C and 350mA. These improvements make 130 LPW or higher at the system level achievable under real operating conditions and enable existing customers to quickly upgrade system performance of applications. Device improves the brightness, voltage characteristics and optical performance in the same, proven 3.45mm x 3.45mm XT package.
CREE

http://ept.hotims.com/61399-89

High-performance benchtop power meter is flexible

FTB-1750 optical power meter delivers high-performance power measurements, saving time and enhancing measurement throughput. Product's 85dB range and fast stabilization time simultaneously measures high and low signals on up to four channels. Designed for the LTB-1 benchtop platform, unit delivers speed, accuracy and flexibility in a compact form-factor. Windows-based LTB-1 benchtop platform boosts efficiency and flexibility with its Ethernet remote control port and powerful processor.
EXFO

http://ept.hotims.com/61399-90

D-Sub connectors conform to MIL-DTL-24308

AMPLIMITE D-sub subminiature connectors conform to MIL-DTL-24308 as well as NASA non-magnetic specifications and are available in six weeks or less. Suitable for harsh environments, devices provide a full range of contact densities, weight savings and EMI shielding. Typical applications include: military equipment, ground support devices, computer peripheral equipment and modems or industrial instrumentation.
TE CONNECTIVITY

http://ept.hotims.com/61399-91

ADVERTISERS' INDEX

HAMMOND MANUFACTURING™

394 Edinburgh Rd., North
Guelph, Ontario N1H 1E5
Phone: (519) 822-2960 Fax: (519) 822-0715

In Stock Enclosures Transformers & Outlet Strips

Small Enclosures

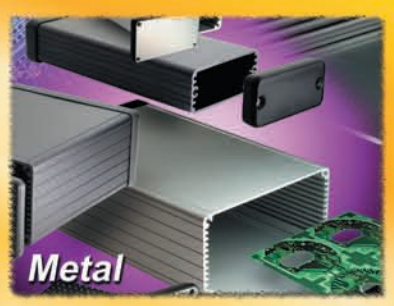

http://ept.hotims.com/61399-21

Racks & Cabinets

http://ept.hotims.com/61399-23

Electrical Enclosures

http://ept.hotims.com/61399-24

Outlet Strips

http://ept.hotims.com/61399-22

Transformers

http://ept.hotims.com/61399-25

Visit our web site for technical data, drawings, catalogues and a list of stocking distributors.

www.hammondmfg.com

http://ept.hotims.com/61399-26

The sharpest minds should have the sharpest tools.

Make all your essential measurements with Keysight's True*volt* DMMs.

Ready to solve problems faster? Keysight's True*volt* DMM family is here to help. With multiple ways to view data, extended ranges to capture more data and faster measurement speed, True*volt* accelerates the measurement process. Whatever the job, or the need, Keysight measures up.

Key specifications	34460A	34461A	34465A	34470A
Digits of resolution	6½	6½	6½	7½
Basic DCV accuracy	75 ppm	35 ppm	30 ppm	16 ppm
Max reading rate	300 rdgs/s	1,000 rdgs/s	5,000 rdgs/s std 50,000 rdgs/s opt	5,000 rdgs/s std 50,000 rdgs/s opt
Memory	1,000 rdgs	10,000 rdgs	50,000 rdgs std 2 million rdgs opt	50,000 rdgs std 2 million rdgs opt

Learn how to solve your test challenges with True*volt* DMMs.
www.keysight.com/find/true*volt*US

Buy from an Authorized Distributor:

microlease · Newark · element14 · TESTEQUITY

KEYSIGHT TECHNOLOGIES

Unlocking Measurement Insights

http://ept.hotims.com/61399-27

Agilent's Electronic Measurement Group is now **Keysight Technologies.**